Hewlett Packard Enterprise

HPE ProLiant ML30 Gen9 Server

User Guide

Abstract

This document is for the person who installs, administers, and troubleshoots servers and storage systems. Hewlett Packard Enterprise assumes you are qualified in the servicing of computer equipment and trained in recognizing hazards in products with hazardous energy levels.

Part Number: 825546-002
September 2016
Edition: 2

© Copyright 2015, 2016 Hewlett Packard Enterprise Development LP

The information contained herein is subject to change without notice. The only warranties for Hewlett Packard Enterprise products and services are set forth in the express warranty statements accompanying such products and services. Nothing herein should be construed as constituting an additional warranty. Hewlett Packard Enterprise shall not be liable for technical or editorial errors or omissions contained herein.

Links to third-party websites take you outside the Hewlett Packard Enterprise website. Hewlett Packard Enterprise has no control over and is not responsible for information outside the Hewlett Packard Enterprise website.

Linux® is the registered trademark of Linus Torvalds in the U.S. and other countries.

Microsoft® and Windows® are U.S. registered trademarks of the Microsoft group of companies.

MicroSD is a trademark or a registered trademark of SD-3C in the United States, other countries or both.

Red Hat® is a registered trademark of Red Hat, Inc. in the United States and other countries.

VMware® is a registered trademark of trademark of VMware, Inc. in the United States and/or other jurisdictions.

Contents

Component identification 6
- Front panel components 6
- Front panel LEDs and buttons 6
  - Front panel LED power fault codes 7
- Rear panel components 8
- Rear panel LEDs and buttons 9
- System board components 10
  - DIMM slot locations 11
  - PCIe expansion slot definitions 11
  - System maintenance switch 11
  - NMI functionality 12
- Drive numbering 13
- Hot-plug drive LED definitions 14
- Fan locations 15

Operations 16
- Server warnings and cautions 16
- Power up the server 16
- Power down the server 16
- Install the bezel 17
- Remove the bezel 17
- Install the access panel 18
- Remove the access panel 19
- Install the air baffle 19
- Remove the air baffle 20

Setup 22
- Optional services 22
- Optimum environment 22
  - Space and airflow requirements 22
  - Temperature requirements 22
  - Power requirements 23
  - Electrical grounding requirements 23
- Identifying the contents of the server shipping carton 23
- Installing hardware options 24
- Installing the operating system 24
- Powering on and selecting boot options in UEFI Boot Mode 24
- Registering the server 25

Hardware options installation 26
- Introduction 26
- Front PCI fan option 26
- Slim optical disk drive option 27
- 350W power supply option (E-star 2.0) 31
- Redundant power supply enablement option 33
- Drive options 39
  - Drive installation guidelines 39
  - Installing a non-hot-plug drive 40
  - Installing a hot-plug drive 42
- Drive cable options 43
  - Host Bus Adapter Mini-SAS cable option 43
  - Smart Array Controller Mini-SAS cable option 44
- Storage controller options 46
  - Storage controller installation guidelines 46
  - Installing a storage controller and FBWC module options 46

Installing a Smart Storage Battery....49
Drive enablement option....51
Tape drive option....54
M.2 SSD enablement option....56
Four-bay LFF hot-plug drive cage option....59
Eight-bay SFF hot-plug drive cage option....61
microSD USB device....64
Memory options....65
Memory subsystem architecture....65
Single-, dual-, and quad-rank DIMMs....66
DIMM identification....66
ECC memory....67
General DIMM slot population guidelines....67
Installing a DIMM....67
Setting up the HPE PS1810-24G Switch (optional)....68
Trusted Platform Module option....69
Installing the Trusted Platform Module board....70
Retaining the recovery key/password....71
Enabling the Trusted Platform Module....72
Cabling....73
Cabling overview....73
Storage cabling....73
Drive enablement option cabling....73
Tape drive option cabling....74
Four-bay LFF non-hot-plug drive cage cabling....75
Four-bay LFF hot-plug drive cage cabling....76
Eight-bay SFF hot-plug drive cage cabling....76
M.2 SSD cabling....78
Slim optical disk drive cabling....78
Front I/O module cabling....79
FBWC cabling....80
Smart Storage Battery cabling....80
System fan cabling....81
Front PCI fan cabling....81
Power supply cabling....82
350W E1.0/E2.0 non-hot-plug power supply....82
Redundant power supply cabling....83
Software and configuration utilities....86
Server mode....86
Product QuickSpecs....86
HPE iLO....86
Active Health System....86
iLO RESTful API support....87
Integrated Management Log....87
HPE Insight Remote Support....87
HPE Insight Remote Support central connect....88
HPE Insight Online direct connect....88
Insight Online....88
Intelligent Provisioning....88
Insight Diagnostics....89
Insight Diagnostics survey functionality....89
Erase Utility....89
Scripting Toolkit for Windows and Linux....90
Service Pack for ProLiant....90
HP Smart Update Manager....90
UEFI System Utilities....90
Using UEFI System Utilities....91
Flexible boot control....91
Restoring and customizing configuration settings....92
Secure Boot configuration....92

Embedded UEFI shell....92
Embedded Diagnostics option....93
iLO RESTful API support for UEFI....93
Re-entering the server serial number and product ID....93
Utilities and features....94
HPE Smart Storage Administrator....94
Automatic Server Recovery....94
USB support....94
Redundant ROM support....95
Keeping the system current....95
Access to Hewlett Packard Enterprise Support Materials....95
Updating firmware or System ROM....95
Drivers....97
Software and firmware....98
Operating System Version Support....98
Version control....98
Operating systems and virtualization software support for ProLiant servers....98
HPE Technology Service Portfolio....98
Change control and proactive notification....99
Troubleshooting....100
Troubleshooting resources....100
System battery replacement....101
Warranty and regulatory information....103
Warranty information....103
Regulatory information....103
Safety and regulatory compliance....103
Belarus Kazakhstan Russia marking....103
Turkey RoHS material content declaration....104
Ukraine RoHS material content declaration....104
Specifications....105
Environmental specifications....105
Server specifications....105
Power supply specifications....105
HPE 350 W Power Supply (E-star 1.0)....106
HPE 350 W Power Supply (E-star 2.0)....106
HPE 460 W CS Gold Hot-plug Power Supply....106
Support and other resources....108
Accessing updates....108
Websites....108
Customer Self Repair....108
Remote support....116
Acronyms and abbreviations....117
Documentation feedback....120
Index....121

Component identification

Front panel components

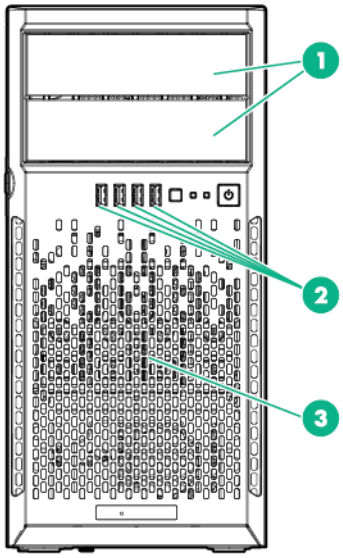

Item	Description
1	Media drive bays
2	USB 3.0 connectors
3	Drive cage bay

Front panel LEDs and buttons

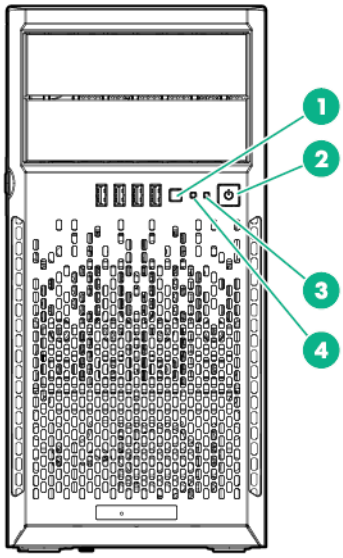

Item	Description	Status
1	UID button/LED*	Solid blue = Activated Flashing blue: • 1 flash per second = Remote management or firmware upgrade in progress • 4 flashes per second = iLO manual reboot sequence initiated • 8 flashes per second = iLO manual reboot sequence in progress Off = Deactivated
2	Power On/Standby button and system power LED*	Solid green = System on Flashing green (1 flash per second) = Performing power on sequence Solid amber = System in standby Off = No power present**
3	NIC status LED*	Solid green = Link to network Flashing green (1 flash per second) = Network active Off = No network activity
4	Health LED*	Solid green = Normal Flashing green (1 flash per second) = iLO is rebooting Flashing amber = System degraded† Flashing red (1 flash per second) = System critical†

* When all four LEDs described in this table flash simultaneously, a power fault has occurred. For more information, see "Front panel LED power fault codes (on page 7)."
** Facility power is not present, power cord is not attached, no power supplies are installed, power supply failure has occurred, or the power button cable is disconnected.
† If the health LED indicates a degraded or critical state, review the system IML or use iLO to review the system health status. For more information, see "Integrated Management Log (on page 87)."

Front panel LED power fault codes

The following table provides a list of power fault codes, and the subsystems that are affected. Not all power faults are used by all servers.

Subsystem	Front panel LED behavior
System board	1 flash
Processor	2 flashes
Memory	3 flashes
Riser board PCIe slots	4 flashes
FlexibleLOM	5 flashes
Removable HPE Flexible Smart Array controller/Smart SAS HBA controller	6 flashes
System board PCIe slots	7 flashes
Power backplane or storage backplane	8 flashes
Power supply	9 flashes

For more information, see "Front panel LEDs and buttons (on page 6)."

Rear panel components

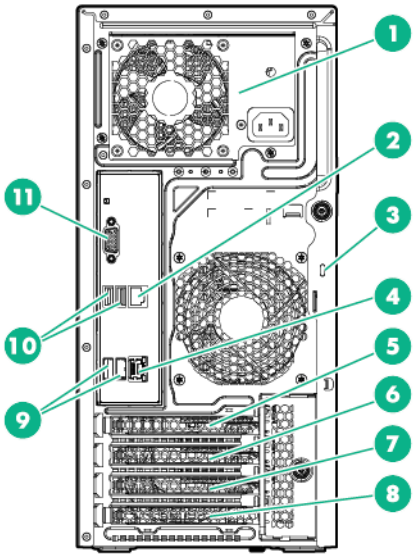

Item	Description
1	Power supply
2	NIC connector 2
3	Kensington lock slot
4	NIC connector 1/ Shared iLO connector
5	PCIe slot 4, PCIe3 x16 (16,8,4,1), full-length*
6	PCIe slot 3, PCIe3 x4 (1), full-length*
7	PCIe slot 2, PCIe3 x4 (1), full-length*
8	PCIe slot 1, PCIe3 x8 (4,1), half-length*
9	USB 3.0 connectors
10	USB 2.0 connectors
11	Video connector

* For more information on the expansion slot specifications, see "PCIe expansion slot definitions (on page 11)."

Rear panel LEDs and buttons

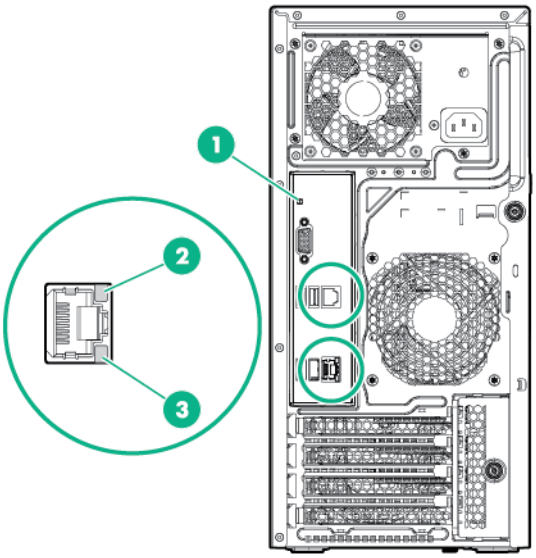

Item	Description	Status
1	UID LED	Solid blue = Activated Flashing blue: • 1 flash per second = Remote management or firmware upgrade in progress • 4 flashes per second = iLO manual reboot sequence initiated • 8 flashes per second = iLO manual reboot sequence in progress Off = Deactivated
2	NIC link LED	Green = Network link Off = No network link
3	NIC activity LED	Solid green = Link to network Flashing green = Network active Off = No network activity

System board components

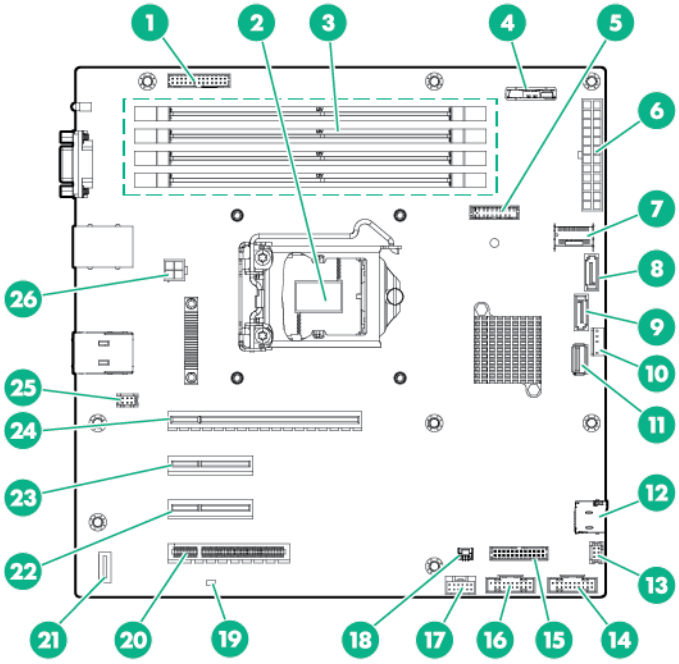

Item	Description
1	RPS connector
2	Processor
3	DIMM slots
4	System battery
5	Trusted platform module connector
6	24-pin power connector
7	Mini-SAS connector
8	SATA connector 5 (for M.2 SSD 1)
9	SATA connector 6 (for M.2 SSD 2)
10	Internal USB 2.0 connector (for tape drive)
11	Internal USB 2.0 connector
12	microSD card slot
13	Front PCI fan connector
14	Front panel USB connector
15	Front panel I/O connector
16	Front panel USB connector
17	Smart Storage Battery connector
18	Storage backup power connector
19	NMI header
20	PCIe slot 1 PCIe3 x8 (4,1), half-length*
21	System maintenance switch
22	PCIe slot 2 PCIe3 x4 (1), full-length*
23	PCIe slot 3 PCIe3 x4 (1), full-length*
24	PCIe slot 4 PCIe3 x16 (16,8,4,1), full-length*

Item	Description
25	System fan connector
26	4-pin power connector

* For more information on the expansion slot specifications, see "PCIe expansion slot definitions (on page 11)."

DIMM slot locations

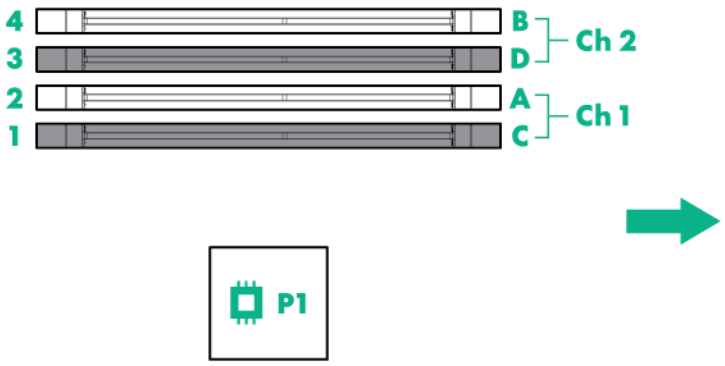

The arrow points toward the front of the server.

DIMM slots are numbered 1 through 4. Letters are used for AMP mode DIMM ordering.

PCIe expansion slot definitions

Slot number	Type	Length	Height	Connector link width	Negotiable link width
1	PCIe3	Half	Full	x8	4, 1
2	PCIe3	Full	Full	x4	1
3	PCIe3	Full	Full	x4	1
4	PCIe3	Full	Full	x16	16,8,4,1

System maintenance switch

Position	Default	Function
S1	Off	• Off = iLO security is enabled. • On = iLO security is disabled.

Position	Default	Function
S2	Off	• Off = System configuration can be changed. • On = System configuration is locked.
S3	Off	Reserved
S4	Off	Reserved
S5	Off	• Off = Power-on password is enabled. • On = Power-on password is disabled.
S6	Off	• Off = No function. • On = ROM reads system configuration as invalid.
S7	Off	• Off = Set default boot mode to UEFI. • On = Set default boot mode to legacy.
S8	—	Reserved
S9	—	Reserved
S10	—	Reserved
S11	—	Reserved
S12	—	Reserved

You can access the redundant ROM by setting S1, S5, and S6 to On.

When the system maintenance switch position 6 is set to the On position, the system is prepared to erase all system configuration settings from both CMOS and NVRAM.

△ **CAUTION:** Clearing CMOS, NVRAM, or both deletes configuration information. Be sure to configure the server properly to prevent data loss.

NMI functionality

An NMI crash dump creates a crash dump log before resetting a system which is not responding.

Crash dump log analysis is an essential part of diagnosing reliability problems, such as failures of operating systems, device drivers, and applications. Many crashes freeze a system, and the only available action for administrators is to restart the system. Resetting the system erases any information which could support problem analysis, but the NMI feature preserves that information by performing a memory dump before a system reset.

To force the system to invoke the NMI handler and generate a crash dump log, do one of the following:

- Use the iLO Virtual NMI feature.
- Short the NMI header ("System board components" on page 10).

For more information, see the Hewlett Packard Enterprise website (**http://www.hpe.com/support/NMI-CrashDump**).

Drive numbering

- Four-bay LFF non-hot-plug drive numbering

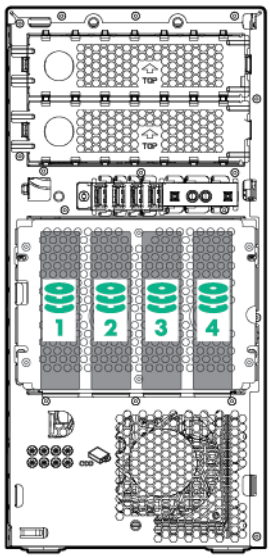

- Four-bay LFF hot-plug drive numbering

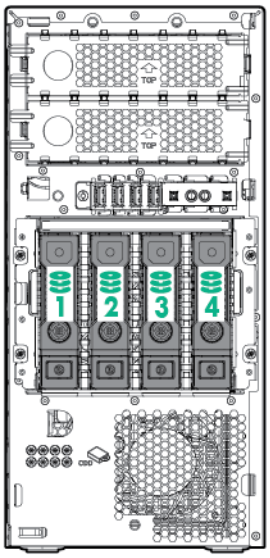

- Eight-bay SFF hot-plug drive numbering

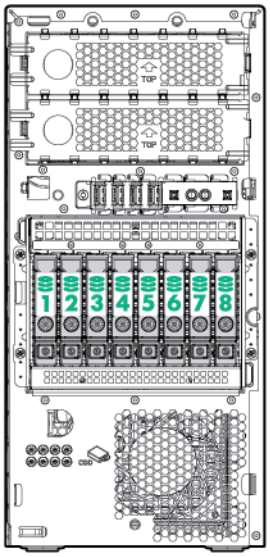

Hot-plug drive LED definitions

When a drive is configured as a part of an array and connected to a powered-up controller, the drive LEDs indicate the status of the drive.

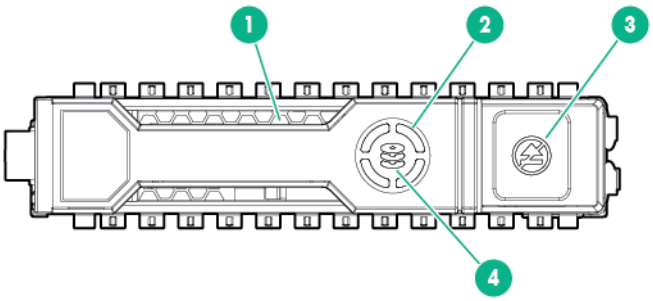

Item	LED	Status	Definition
1	Locate	Solid blue	The drive is being identified by a host application.
		Flashing blue	The drive carrier firmware is being updated or requires an update.
2	Activity ring	Rotating green	Drive activity.
		Off	No drive activity.
3	Do not remove	Solid white	Do not remove the drive. Removing the drive causes one or more of the logical drives to fail.
		Off	Removing the drive does not cause a logical drive to fail.
4	Drive status	Solid green	The drive is a member of one or more logical drives.
		Flashing green	The drive is rebuilding or performing a RAID migration, strip size migration, capacity expansion, or logical drive extension, or is erasing.
		Flashing amber/green	The drive is a member of one or more logical drives and predicts the drive will fail.
		Flashing amber	The drive is not configured and predicts the drive will fail.

Item	LED	Status	Definition
		Solid amber	The drive has failed.
		Off	The drive is not configured by a RAID controller.

IMPORTANT: The Dynamic Smart Array B140i Controller is only available in UEFI Boot Mode. It cannot be enabled in Legacy BIOS Boot Mode. If the B140i controller is disabled, drives connected to the system board Mini-SAS connectors operate in AHCI or Legacy mode. Under this condition:

- The drives cannot be a part of a hardware RAID or a logical drive.
- The Locate, Drive status, and Do not remove LEDs of the affected drives are disabled.

Use BIOS/Platform Configuration (RBSU) in the UEFI System Utilities (on page 90) to enable or disable the B140i controller (System Configuration → BIOS/Platform Configuration (RBSU) → System Options → SATA Controller Options → Embedded SATA Configuration).

Fan locations

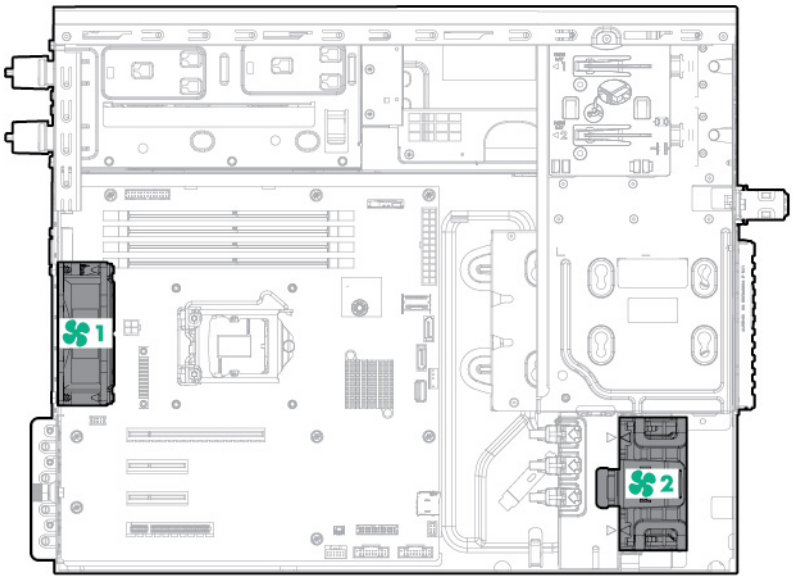

Fan number	Fan type
1	System fan
2	Front PCI fan (optional)

Operations

Server warnings and cautions

⚠ **WARNING:** To reduce the risk of personal injury, electric shock, or damage to the equipment, remove the power cord to remove power from the server. Pressing the Power On/Standby button does not shut off system power completely. Portions of the power supply and some internal circuitry remain active until AC power is removed.

⚠ **WARNING:** To reduce the risk of electric shock, fire, or damage to the equipment, only display devices that are qualified to be made of fire-retardant material must be connected to the video connector (VGA) on the rear panel.

⚠ **WARNING:** To reduce the risk of personal injury from hot surfaces, allow the drives and the internal system components to cool before touching them.

△ **CAUTION:** To prevent improper cooling and thermal damage, do not operate the server with the access panel and the M.2 SSD compartment cover open or removed.

△ **CAUTION:** To prevent improper cooling and thermal damage, do not operate the server or the enclosure unless all device bays are populated with either a component or a blank.

△ **CAUTION:** To prevent damage to electrical components, take the appropriate anti-static precautions before beginning any installation, removal, or replacement procedure. Improper grounding can cause electrostatic discharge.

Power up the server

1. Connect each power cord to the server.
2. Connect each power cord to the power source.
3. Press the Power On/Standby button.

   The server exits standby mode and applies full power to the system. The system power LED changes from amber to green.

Power down the server

Before powering down the server for any upgrade or maintenance procedures, perform a backup of critical server data and programs.

To power down the server, use one of the following methods:

- Press and release the Power On/Standby button.

  This method initiates a controlled shutdown of applications and the OS before the server enters standby mode.
- Press and hold the Power On/Standby button for more than 4 seconds to force the server to enter standby mode.

This method forces the server to enter standby mode without properly exiting applications and the OS. If an application stops responding, you can use this method to force a shutdown.

- Use a virtual power button selection through iLO.

  This method initiates a controlled remote shutdown of applications and the OS before the server enters standby mode.

Before proceeding, verify that the server is in standby mode by observing that the system power LED is amber.

Install the bezel

1. Insert the tabs on the bezel into the slots on the front chassis.
2. Close and lock the bezel.

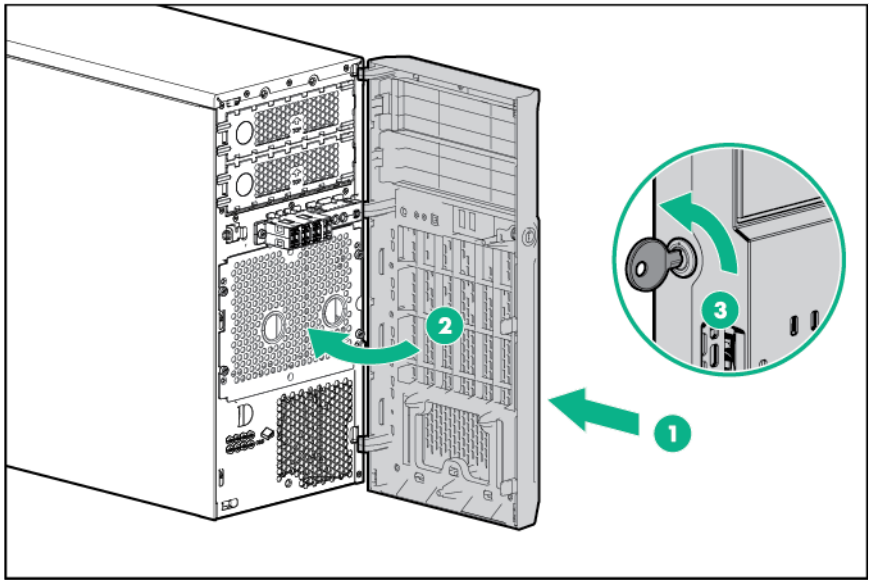

Remove the bezel

The tower bezel must be unlocked and opened to access the drive cage and media bays. It must be unlocked to remove the access panel. The bezel must remain closed during normal server operations.

1. Unlock the bezel.
2. Open the bezel.

3. Pull the bezel away from the front chassis.

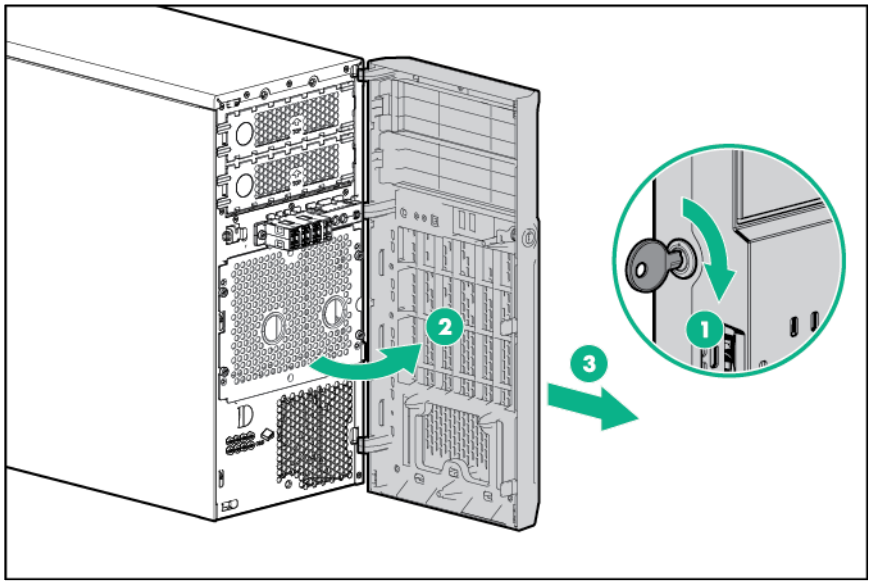

Install the access panel

1. Power down the server (on page 16).
2. Remove all power:
   a. Disconnect each power cord from the power source.
   b. Disconnect each power cord from the server.
3. Remove the bezel (on page 17).
4. Place the server on its side with the access panel facing up.
5. Install the access panel:
   a. Place the access panel on the chassis, and slide it toward the front of the server.
   b. Tighten the thumbscrew.

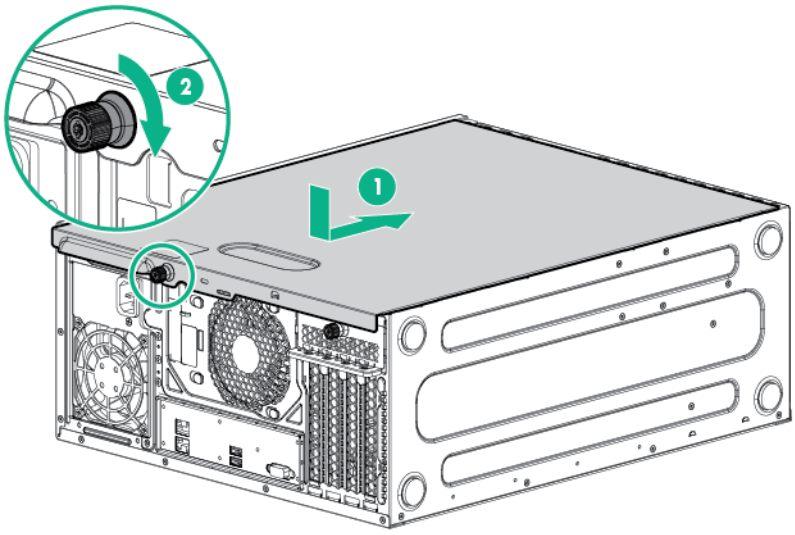

6. Close and lock the bezel ("Install the bezel" on page 17).

Remove the access panel

WARNING: To reduce the risk of personal injury from hot surfaces, allow the drives and the internal system components to cool before touching them.

CAUTION: For proper cooling, do not operate the server without the access panel, baffles, expansion slot covers, or blanks installed. If the server supports hot-plug components, minimize the amount of time the access panel is open.

1. Power down the server (on page 16).
2. Remove all power:
   a. Disconnect each power cord from the power source.
   b. Disconnect each power cord from the server.
3. Remove the bezel (on page 17).
4. Place the server on its side with the access panel facing up.
5. If installed, unlock and remove the Kensington security lock.
6. Remove the access panel:
   a. Loosen the access panel thumbscrew.
   b. Slide the access panel back.
   c. Lift the access panel away from the chassis.

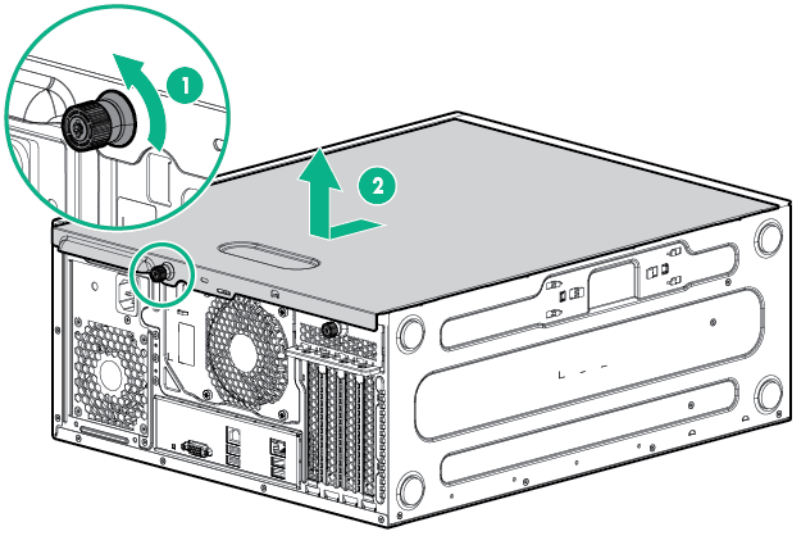

Install the air baffle

1. Power down the server (on page 16).
2. Remove all power:
   a. Disconnect each power cord from the power source.
   b. Disconnect each power cord from the server.
3. Remove the bezel (on page 17).
4. Place the server on its side with the access panel facing up.
5. Remove the access panel (on page 19).
6. Insert the tabs on the baffle into the slots on the rear chassis.

7. Push the front end of the baffle into the chassis.

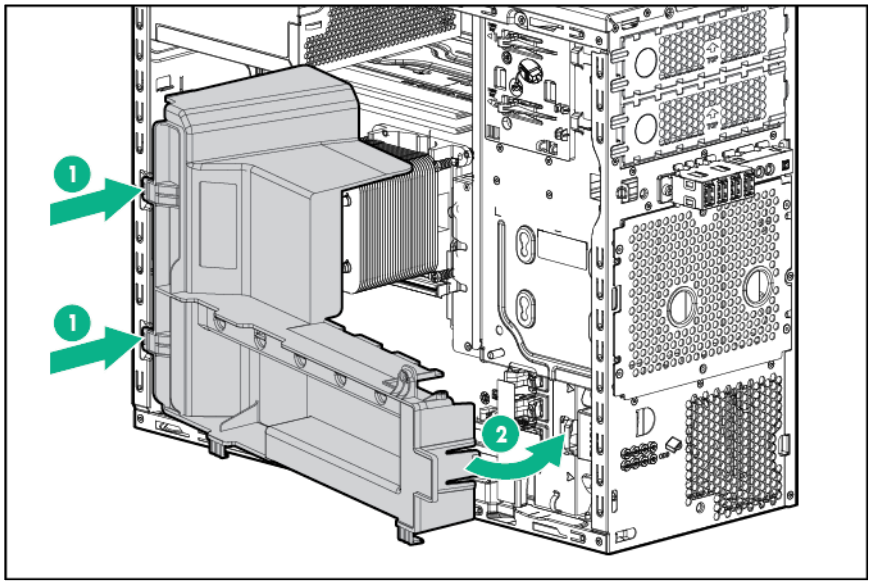

8. Install the access panel (on page 18).
9. Install the bezel (on page 17).
10. Power up the server (on page 16).

Remove the air baffle

> **CAUTION:** For proper cooling, do not operate the server without the access panel, baffles, expansion slot covers, or blanks installed. If the server supports hot-plug components, minimize the amount of time the access panel is open.

1. Power down the server (on page 16).
2. Remove all power:
   a. Disconnect each power cord from the power source.
   b. Disconnect each power cord from the server.
3. Remove the bezel (on page 17).
4. Place the server on its side with the access panel facing up.
5. Remove the access panel (on page 19).

6. Remove the air baffle.

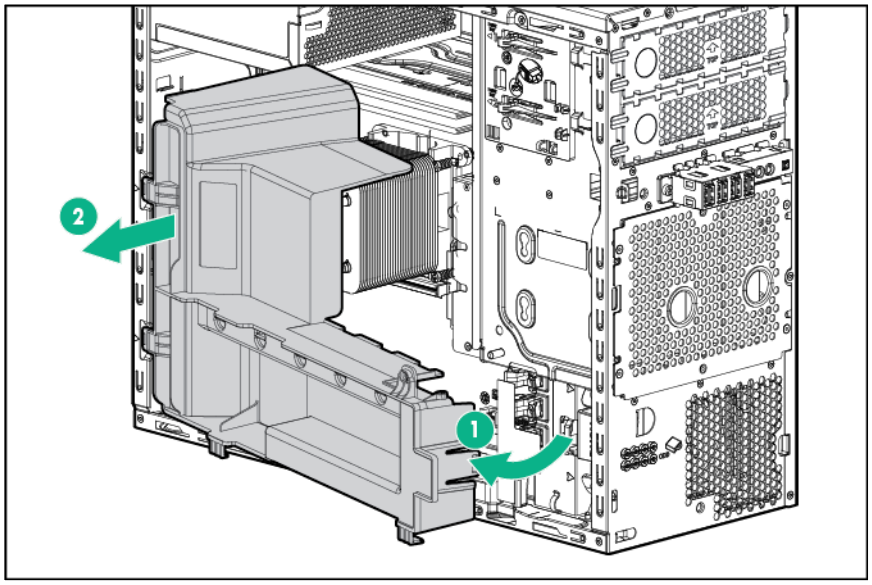

Setup

Optional services

Delivered by experienced, certified engineers, HPE support services help you keep your servers up and running with support packages tailored specifically for HPE ProLiant systems. HPE support services let you integrate both hardware and software support into a single package. A number of service level options are available to meet your business and IT needs.

HPE support services offer upgraded service levels to expand the standard product warranty with easy-to-buy, easy-to-use support packages that will help you make the most of your server investments. Some of the HPE support services for hardware, software or both are:

- Foundation Care – Keep systems running.
  - 6-Hour Call-to-Repair
  - 4-Hour 24x7
  - Next Business Day
- Proactive Care – Help prevent service incidents and get you to technical experts when there is one.
  - 6-Hour Call-to-Repair
  - 4-Hour 24x7
  - Next Business Day
- Startup and implementation services for both hardware and software
- HPE Education Services – Help train your IT staff.

For more information on HPE support services, see the Hewlett Packard Enterprise website (**http://www.hpe.com/services**).

Optimum environment

When installing the server, select a location that meets the environmental standards described in this section.

Space and airflow requirements

Leave at least a 7.6-cm (3-inch) clearance space at the front and back of the server for proper ventilation.

Temperature requirements

To ensure continued, safe, and reliable equipment operation, install or position the system in a well-ventilated, climate-controlled environment.

The maximum recommended TMRA for most server products is 35°C (95°F). The temperature in the room where the server is located must not exceed 35°C (95°F).

△ **CAUTION:** To reduce the risk of damage to the equipment when installing third-party options:

- Do not permit optional equipment to impede airflow around the server beyond the maximum allowable limits.
- Do not exceed the manufacturer's TMRA.

Power requirements

Installation of this equipment must comply with local and regional electrical regulations governing the installation of information technology equipment by licensed electricians. This equipment is designed to operate in installations covered by NFPA 70, 1999 Edition (National Electric Code) and NFPA-75, 1992 (code for Protection of Electronic Computer/Data Processing Equipment). For electrical power ratings on options, see the product rating label or the user documentation supplied with that option.

△ **CAUTION:** Protect the server from power fluctuations and temporary interruptions with a regulating uninterruptible power supply. This device protects the hardware from damage caused by power surges and voltage spikes and keeps the system in operation during a power failure.

When installing more than one server, you might have to use additional power distribution devices to safely provide power to all devices. Observe the following guidelines:

- Balance the server power load between available AC supply branch circuits.
- Do not allow the overall system AC current load to exceed 80% of the branch circuit AC current rating.
- Do not use common power outlet strips for this equipment.
- Provide a separate electrical circuit for the server.

Electrical grounding requirements

The server must be grounded properly for proper operation and safety. In the United States, you must install the equipment in accordance with NFPA 70, 1999 Edition (National Electric Code), Article 250, as well as any local and regional building codes. In Canada, you must install the equipment in accordance with Canadian Standards Association, CSA C22.1, Canadian Electrical Code. In all other countries, you must install the equipment in accordance with any regional or national electrical wiring codes, such as the International Electrotechnical Commission (IEC) Code 364, parts 1 through 7. Furthermore, you must be sure that all power distribution devices used in the installation, such as branch wiring and receptacles, are listed or certified grounding-type devices.

Because of the high ground-leakage currents associated with multiple servers connected to the same power source, Hewlett Packard Enterprise recommends the use of a PDU that is either permanently wired to the building's branch circuit or includes a nondetachable cord that is wired to an industrial-style plug. NEMA locking-style plugs or those complying with IEC 60309 are considered suitable for this purpose. Using common power outlet strips for the server is not recommended.

Identifying the contents of the server shipping carton

Unpack the server shipping carton and locate the materials and documentation necessary for installing the server.

The contents of the server shipping carton include:

- Server
- Power cord

You need the following items for some procedures:

- T-10/T-15 Torx screwdriver
- Hardware options
- Operating system or application software

Installing hardware options

Install any hardware options before initializing the server. For options installation information, see the option documentation. For server-specific information, see "Hardware options installation (on page 26)."

Installing the operating system

This ProLiant server does not ship with provisioning media. Everything needed to manage and install the system software and firmware is preloaded on the server.

To operate properly, the server must have a supported operating system. Attempting to run an unsupported operating system can cause serious and unpredictable results. For the latest information on operating system support, see the Hewlett Packard Enterprise website (**http://www.hpe.com/info/supportos**).

Failure to observe UEFI requirements for ProLiant Gen9 servers can result in errors installing the operating system, failure to recognize boot media, and other boot failures. For more information on these requirements, see the *HPE UEFI Requirements* on the Hewlett Packard Enterprise website (**http://www.hpe.com/info/ProLiantUEFI/docs**).

To install an operating system on the server, use one of the following methods:

- Intelligent Provisioning—For single-server deployment, updating, and provisioning capabilities.

  To install an operating system on the server with Intelligent Provisioning (local or remote):

  a. Connect the Ethernet cable between the network connector on the server and a network jack.
  b. Press the Power On/Standby button.
  c. During server POST, press **F10**.
  d. Complete the initial Preferences and Registration portion of Intelligent Provisioning (on page 88).
  e. At the 1 Start screen, click **Configure and Install**.
  f. To finish the installation, follow the onscreen prompts. An Internet connection is required to update the firmware and systems software.

- Insight Control server provisioning—For multi-server remote OS deployment, use Insight Control server provisioning for an automated solution. For more information, see the Insight Control documentation on the Hewlett Packard Enterprise website (**http://www.hpe.com/info/insightcontrol/docs**).

For additional system software and firmware updates, download the Service Pack for ProLiant from the Hewlett Packard Enterprise website (**http://www.hpe.com/servers/spp/download**). Software and firmware must be updated before using the server for the first time, unless any installed software or components require an older version.

For more information, see "Keeping the system current (on page 95)."

For more information on using these installation methods, see the Hewlett Packard Enterprise website (**http://www.hpe.com/info/ilo**).

Powering on and selecting boot options in UEFI Boot Mode

On servers operating in UEFI Boot Mode, the boot controller and boot order are set automatically.

1. Press the Power On/Standby button.
2. During the initial boot:

- To modify the server configuration ROM default settings, press the **F9** key in the ProLiant POST screen to enter the UEFI System Utilities screen. By default, the System Utilities menus are in the English language.
- If you do not need to modify the server configuration and are ready to install the system software, press the **F10** key to access Intelligent Provisioning.

For more information on automatic configuration, see the UEFI documentation on the Hewlett Packard Enterprise website (**http://www.hpe.com/info/ProLiantUEFI/docs**).

Registering the server

To experience quicker service and more efficient support, register the product at the Hewlett Packard Enterprise Product Registration website (**http://www.hpe.com/info/register**).

Hardware options installation

Introduction

If more than one option is being installed, read the installation instructions for all the hardware options and identify similar steps to streamline the installation process.

⚠ **WARNING:** To reduce the risk of personal injury from hot surfaces, allow the drives and the internal system components to cool before touching them.

△ **CAUTION:** To prevent damage to electrical components, properly ground the server before beginning any installation procedure. Improper grounding can cause electrostatic discharge.

Front PCI fan option

For more information about product features, specifications, options, configurations, and compatibility, see the product QuickSpecs on the Hewlett Packard Enterprise website (**http://www.hpe.com/info/qs**).

To install the component:

1. Power down the server (on page 16).
2. Remove all power:
   a. Disconnect each power cord from the power source.
   b. Disconnect each power cord from the server.
3. Remove the bezel (on page 17).
4. Place the server on its side with the access panel facing up.
5. Remove the access panel (on page 19).
6. Remove the air baffle (on page 20).
7. Install the front PCI fan.
   a. Slide the front PCI fan into the fan bay.

b. Route the front PCI fan cable through the cable clips and connect the cable to the system board.

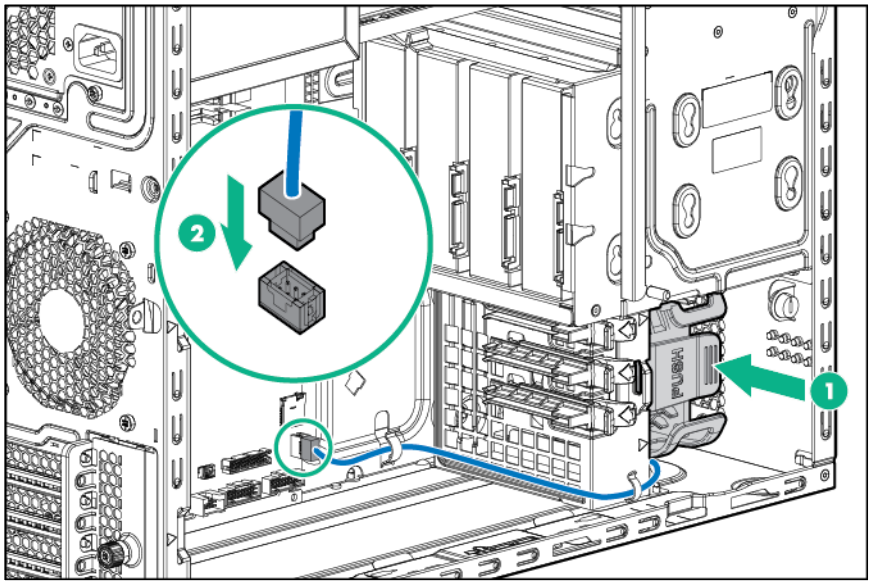

8. Install the air baffle (on page 19).
9. Install the access panel (on page 18).
10. Install the bezel (on page 17).
11. Return the server to an upright position.
12. Connect each power cord to the server.
13. Connect each power cord to the power source.
14. Power up the server (on page 16).

Slim optical disk drive option

For more information about product features, specifications, options, configurations, and compatibility, see the product QuickSpecs on the Hewlett Packard Enterprise website (**http://www.hpe.com/info/qs**).

To install the component:

1. Power down the server (on page 16).
2. Remove all power:
   a. Disconnect each power cord from the power source.
   b. Disconnect each power cord from the server.
3. Remove the bezel (on page 17).
4. Place the server on its side with the access panel facing up.
5. Remove the access panel (on page 19).
6. Remove the air baffle (on page 20).

7. Remove the media drive bay blank.

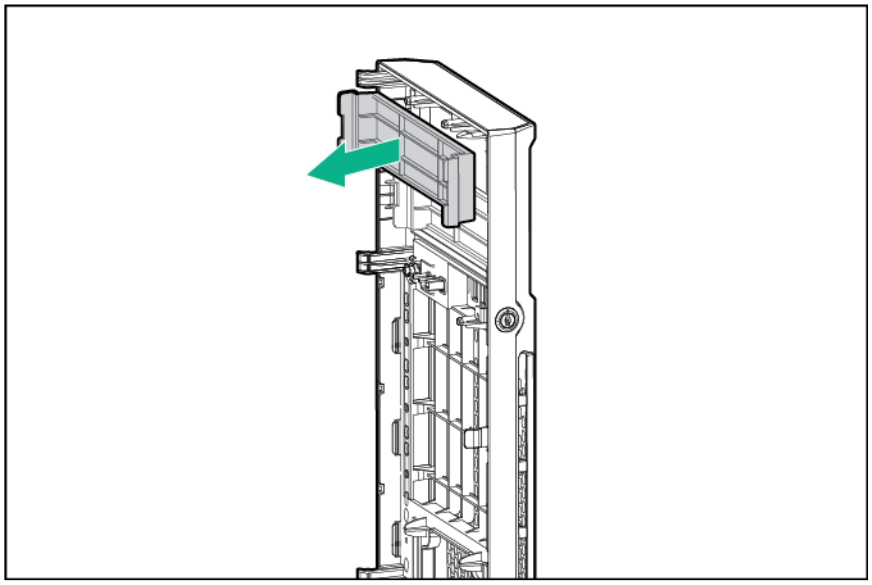

8. Remove the EMI shield.

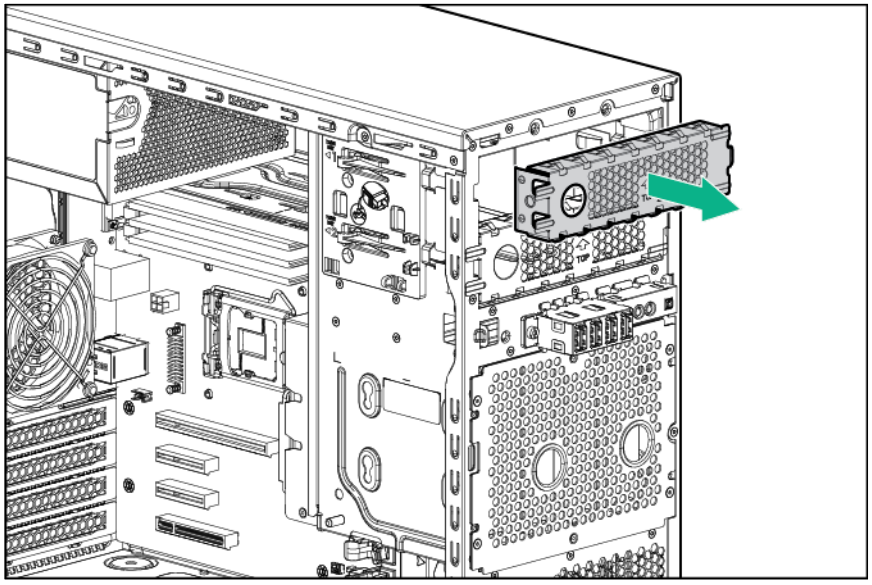

9. Install the slim optical disk drive into the drive cage.
   a. Slide the slim optical disk drive into the drive cage.
   b. Install the two T-15 screws and secure the drive into the cage.

c. Install four M3 screws from the server front panel to each side of the drive cage.

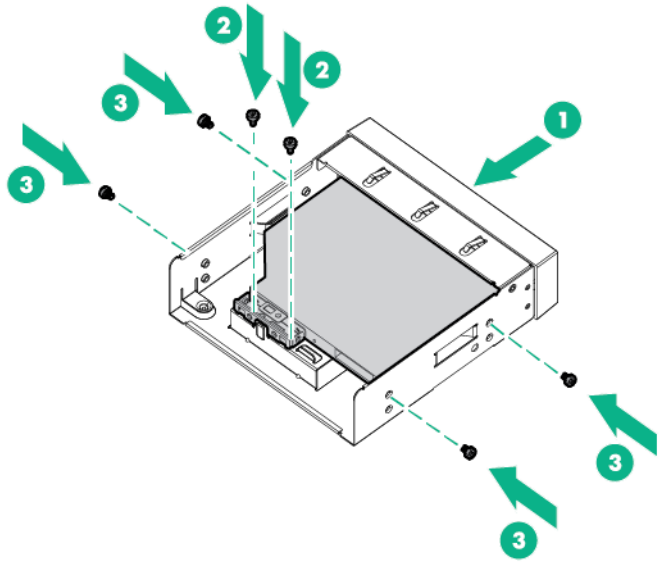

10. Connect the SATA/Power Y-cables to the rear of the drive, then route the cable through the clip on the drive cage.

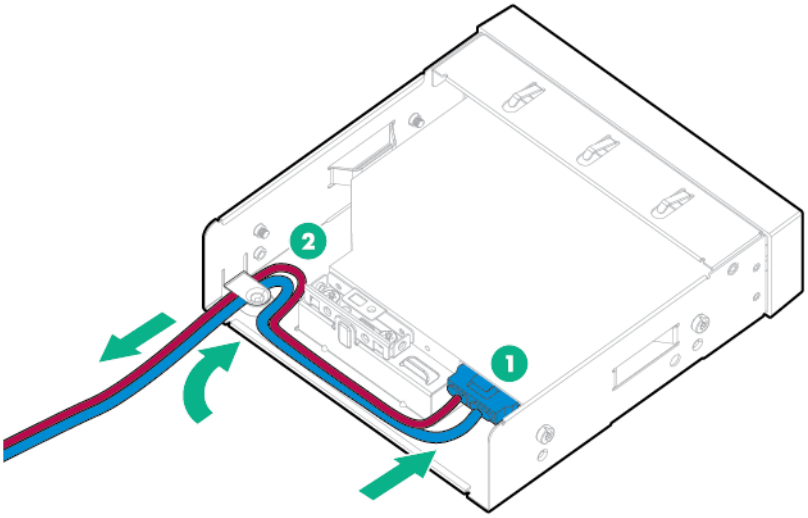

11. Insert the optical drive assembly into the media drive bay until it clicks into place.

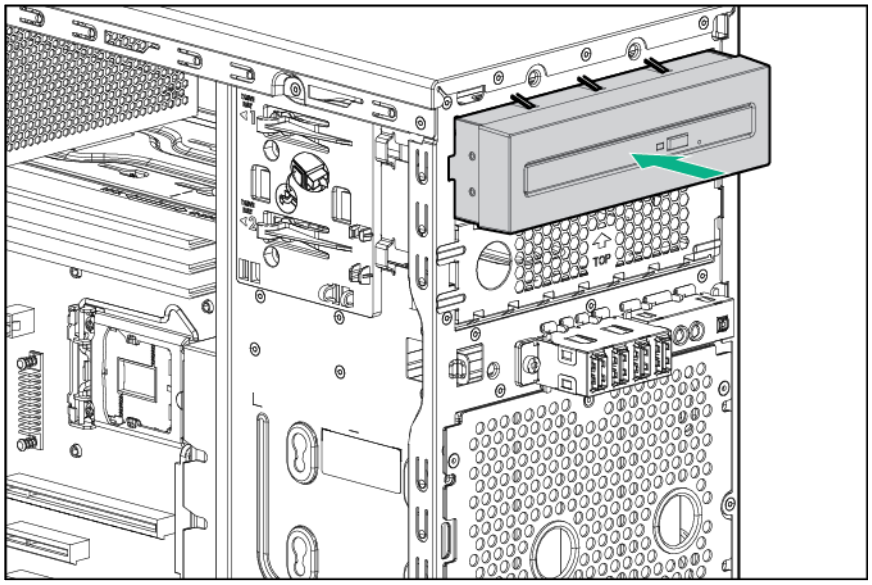

12. Connect the SATA/power Y-cable:
    a. Connect the 4-pin end of the SATA/Power Y-cable to the 4-pin cable from the power supply.
    b. Connect the right angle SATA end of the SATA/Power Y-cable to the system board.
    c. Route the SATA cable through the cable management clips.

    If a redundant power supply is installed, connect the 4-pin to 4-pin extension cable to the redundant power supply cable.

    For cable routing information, see "Slim optical disk drive cabling (on page 78)."

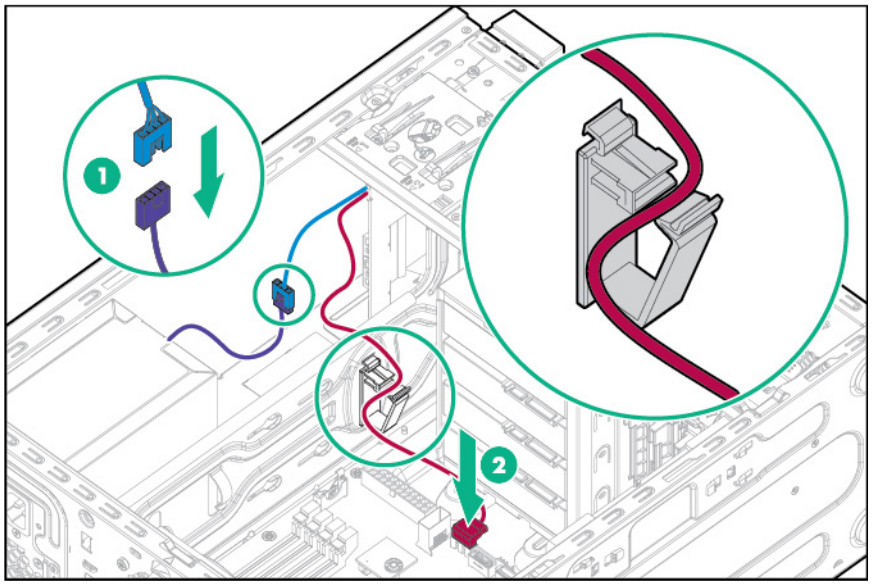

13. Install the air baffle (on page 19).
14. Install the access panel (on page 18).
15. Install the bezel (on page 17).
16. Return the server to an upright position.
17. Connect each power cord to the server.
18. Connect each power cord to the power source.
19. Power up the server (on page 16).

350W power supply option (E-star 2.0)

For more information about product features, specifications, options, configurations, and compatibility, see the product QuickSpecs on the Hewlett Packard Enterprise website (**http://www.hpe.com/info/qs**).

To install the component:

1. Power down the server (on page 16).
2. Remove all power:
   a. Disconnect each power cord from the power source.
   b. Disconnect each power cord from the server.
3. Remove the bezel (on page 17).
4. Place the server on its side with the access panel facing up.
5. Remove the access panel (on page 19).
6. Remove the air baffle (on page 20).
7. Disconnect all power supply cables from the system board, drive cages, and devices.
8. Remove the power supply.

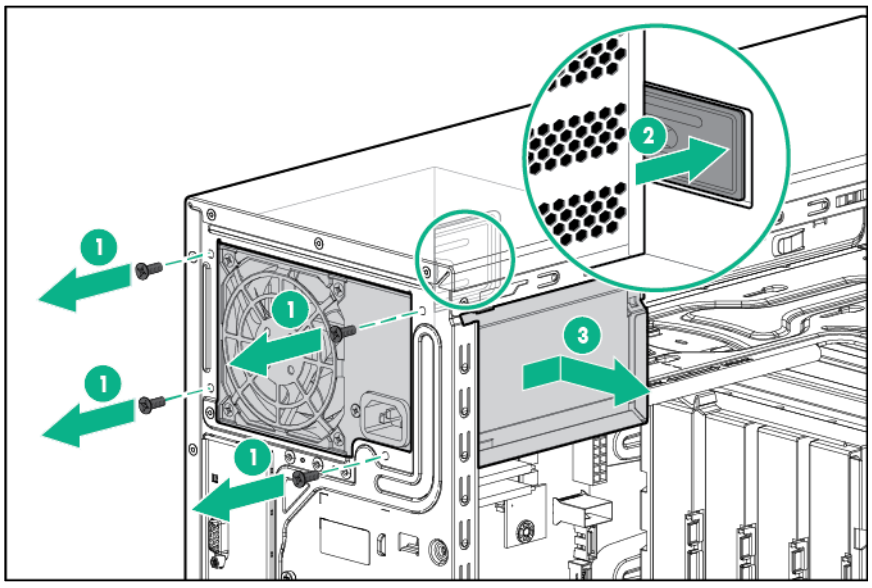

9. Install the 350W power supply.
   a. Slide the power supply into the chassis.

b. Secure the power supply with four screws.

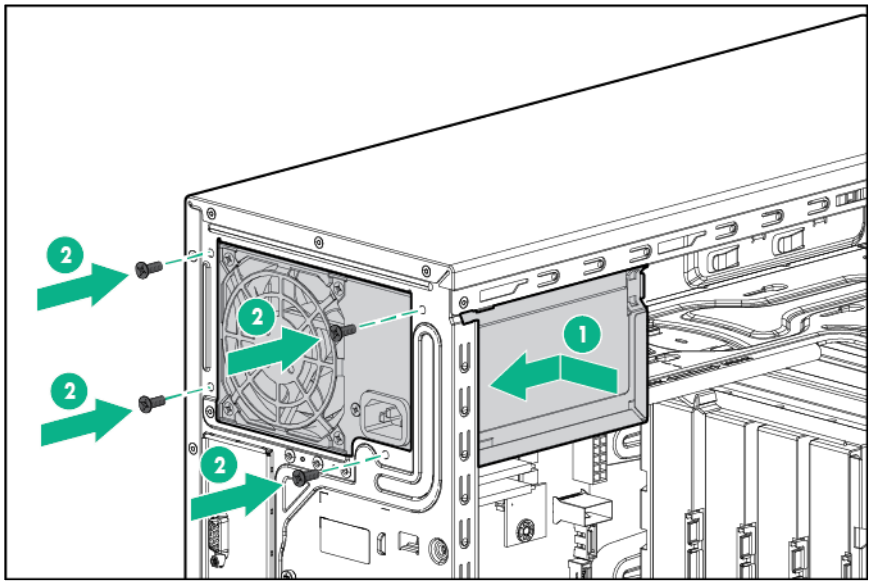

10. Connect the power supply cables:
    a. 24-pin power cable to the system board
    b. 4-pin power cable to the system board
    c. 8-pin power cable to the drive cage backplane or non-hot-plug drive power cable
    - Four-bay LFF non-hot-plug drive configuration

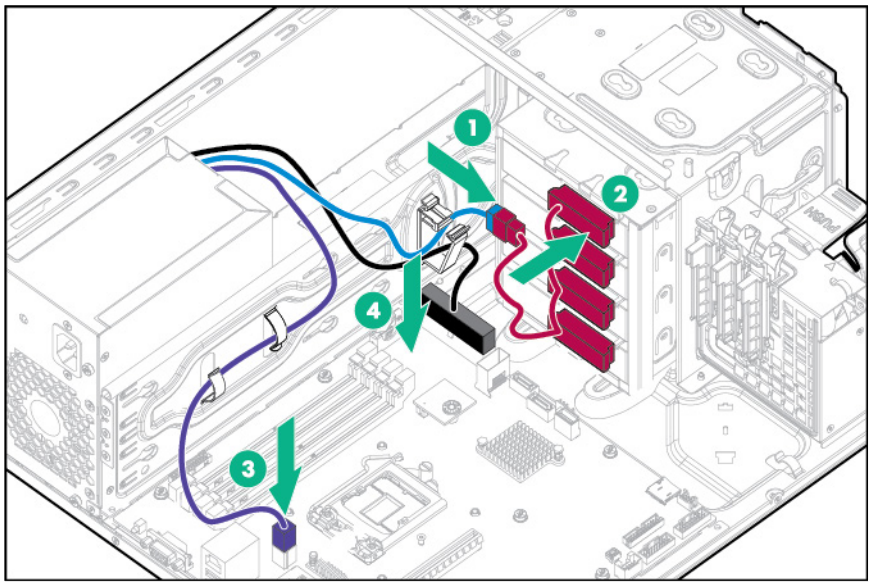

- Four-bay LFF hot-plug drive configuration

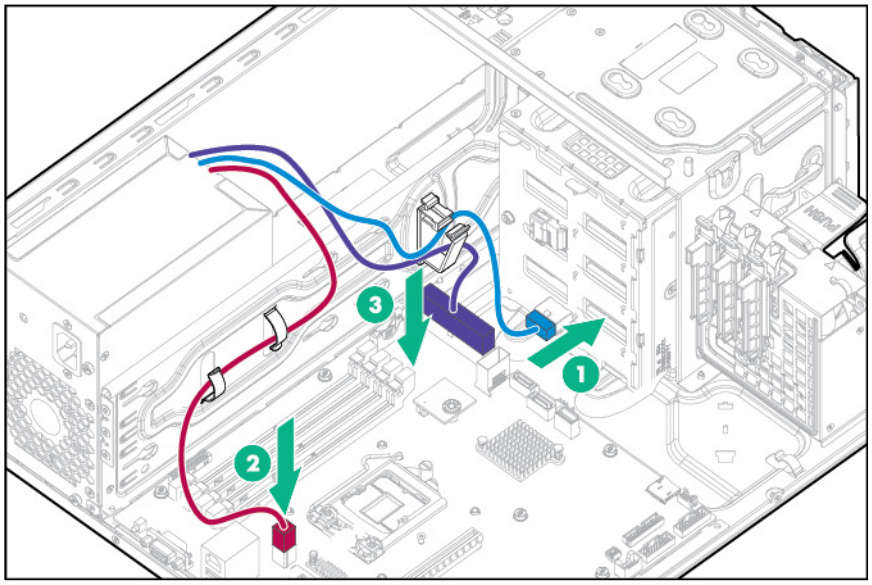

- Eight-bay SFF hot-plug drive configuration

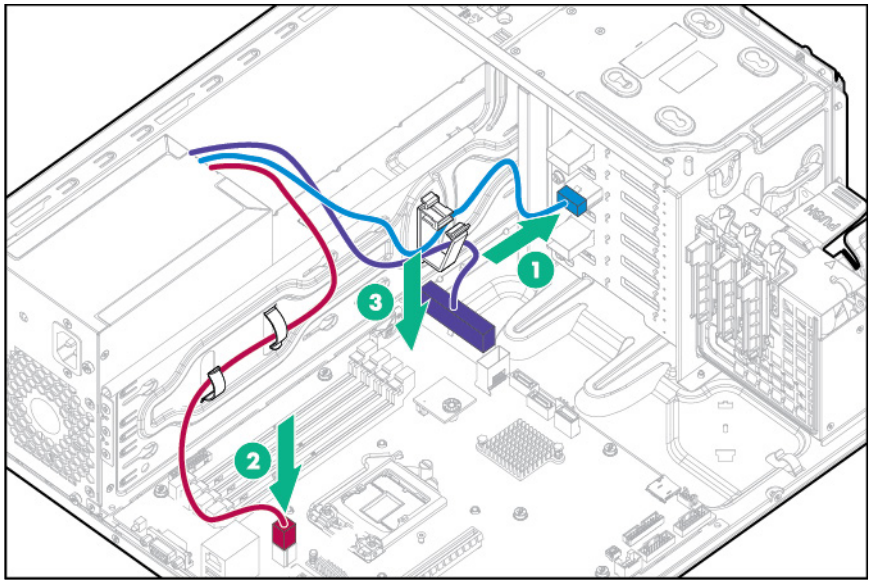

11. Install the air baffle (on page 19).
12. Install the access panel (on page 18).
13. Install the bezel (on page 17).
14. Return the server to an upright position.
15. Connect each power cord to the server.
16. Connect each power cord to the power source.
17. Power up the server (on page 16).

Redundant power supply enablement option

For more information about product features, specifications, options, configurations, and compatibility, see the product QuickSpecs on the Hewlett Packard Enterprise website (**http://www.hpe.com/info/qs**).

Install the RPS enablement option to improve power efficiency and enable power redundancy. Power redundancy requires the installation of two power supply modules. This module is a separately purchased option and is not part of the RPS enablement kit.

When the RPS enablement option is installed, the lower media drive bay will not be available.

To install the component:

1. Power down the server (on page 16).
2. Remove all power:
   a. Disconnect each power cord from the power source.
   b. Disconnect each power cord from the server.
3. Remove the bezel (on page 17).
4. Place the server on its side with the access panel facing up.
5. Remove the access panel (on page 19).
6. Remove the air baffle (on page 20).
7. Disconnect all power supply cables from the system board, drive cages, and devices.
8. Remove all installed devices and any EMI shields from the two media drive bays.

   When the RPS enablement is installed, only the upper media drive bay will be available.

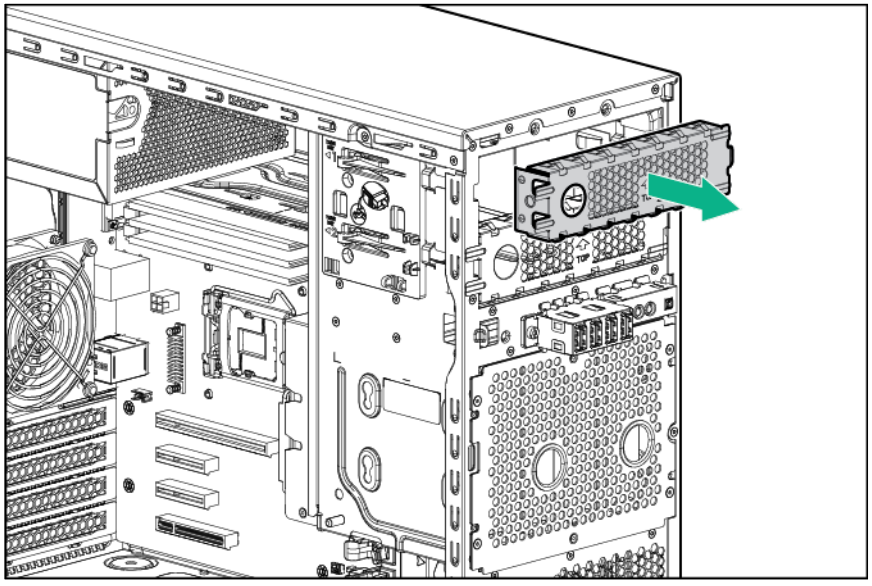

9. Remove the power supply.

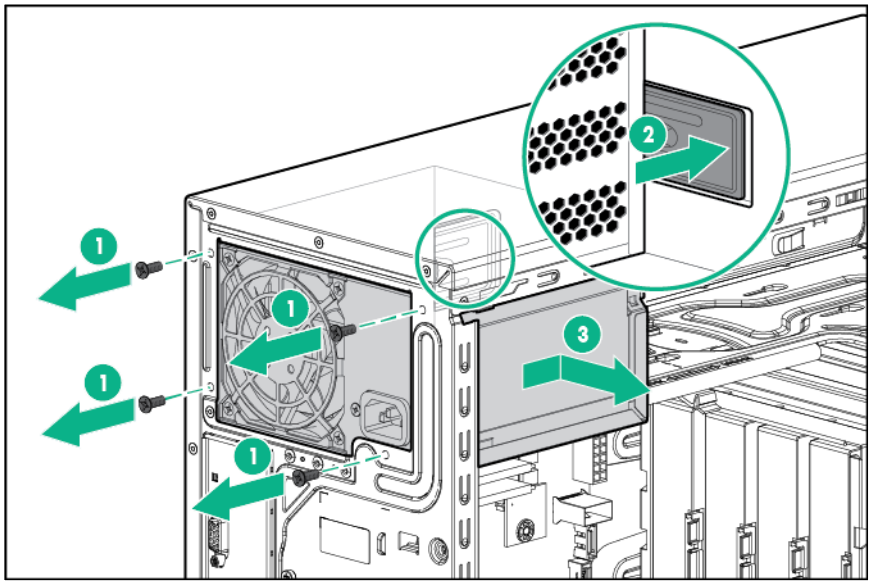

10. Install the RPS cage.
    a. Slide the RPS cage into the chassis.
    b. Secure the RPS cage with four screws.

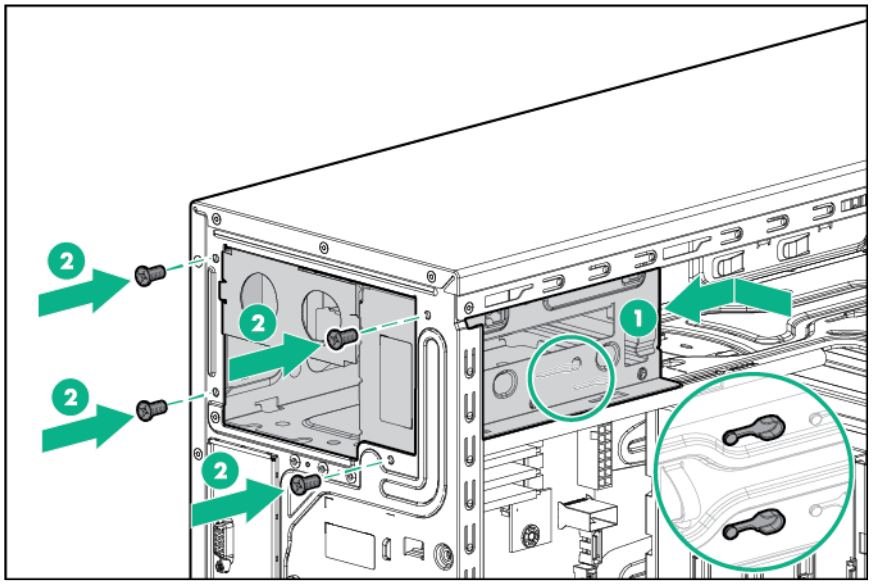

11. Install the RPS backplane module:
    a. Route the power supply cables through the media drive bays.
    b. Align the pins on the chassis and slide the RPS backplane module through the media drive bays.

c. Tighten the thumbscrew.

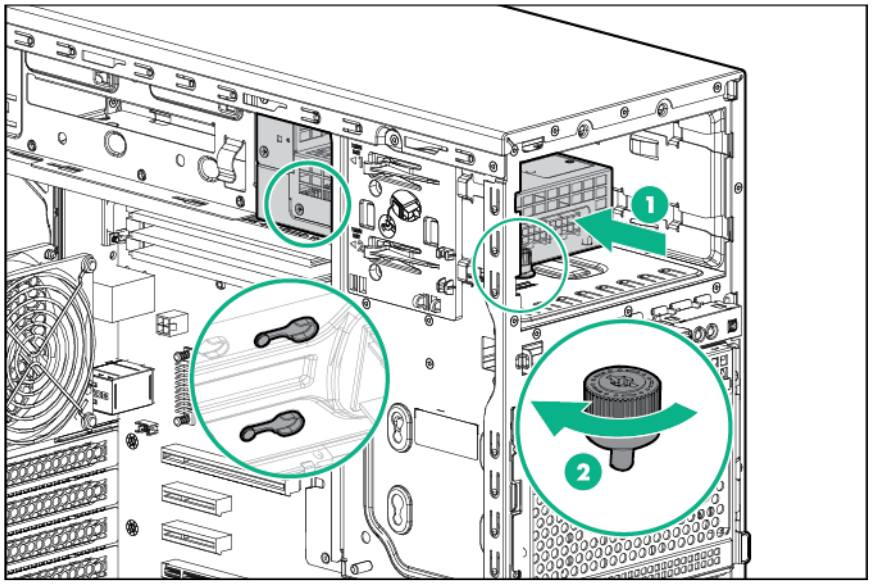

12. Install the first power input module into the lower bay.

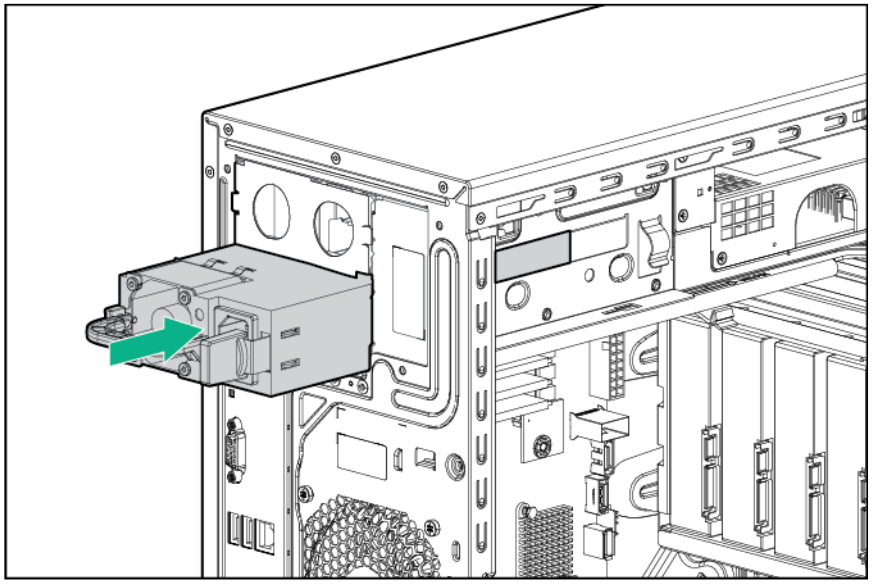

△ **CAUTION:** The default and redundant power supplies in the server must have the same output power capacity. Verify that all power supplies have the same part number and label color. The system becomes unstable and might shut down if it detects mismatched power supplies.

13. To enable the redundant power supply configuration:

a. Remove the blank from the upper bay.

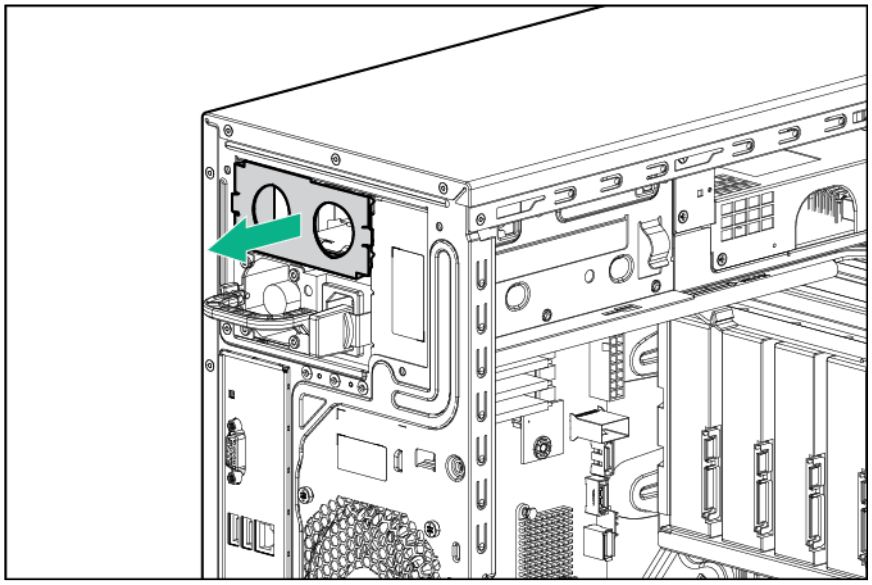

b. Install a second power input module into the upper bay.

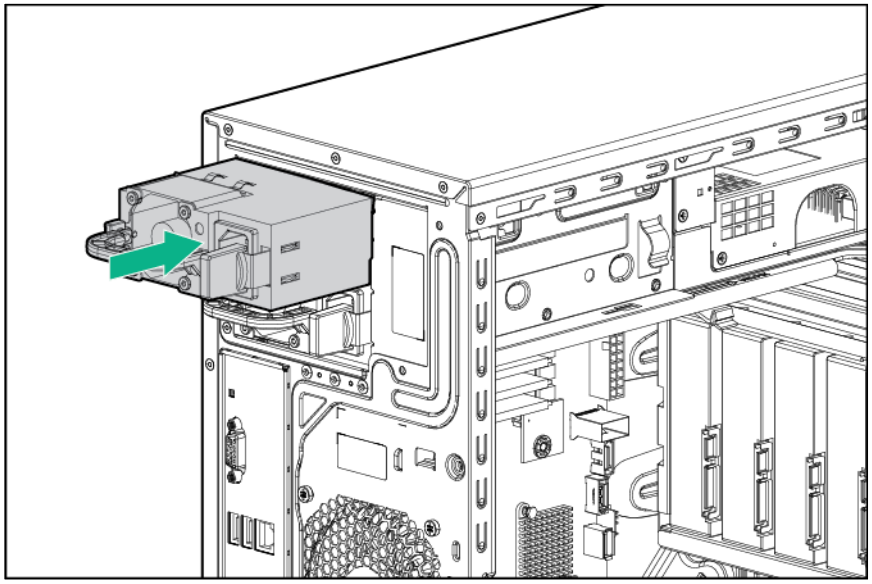

14. Connect the power supply cables.
    a. 24-pin power cable to the system board
    b. 4-pin power cable to the system board
    c. 10-pin to 8-pin power cable to the drive cage backplane or non-hot-plug drive cable
    d. RPS cable to the system board

— Four-bay LFF non-hot-plug drive configuration

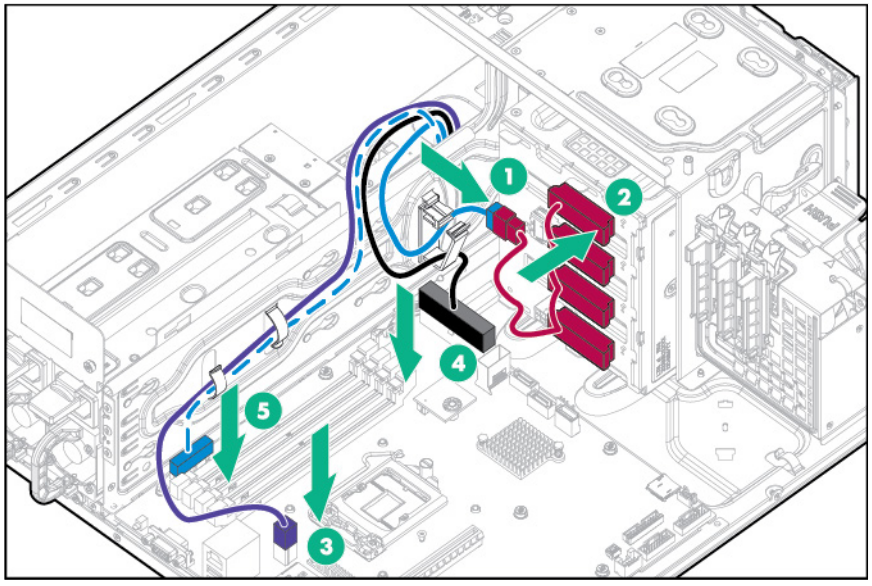

— Four-bay LFF hot-plug drive configuration

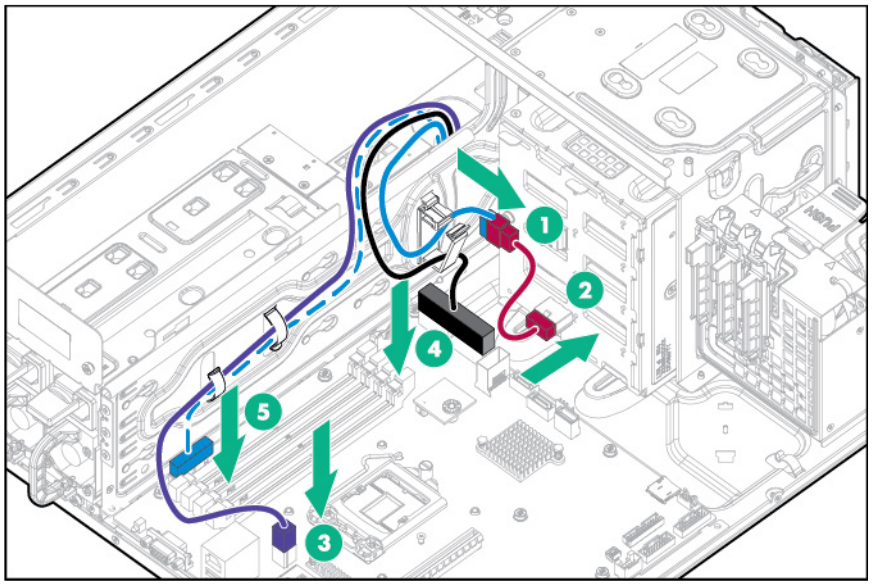

— Eight-bay SFF hot-plug drive configuration

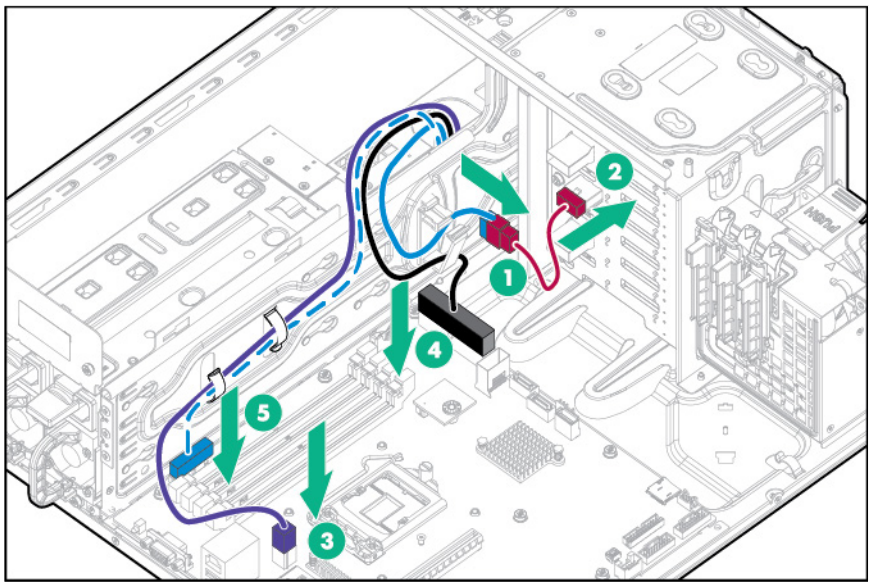

For RPS cable routing to a slim optical disc drive or a drive enablement option, see "Storage Cabling (on page 73)."

15. Install the air baffle (on page 19).
16. Install the access panel (on page 18).
17. Install the bezel (on page 17).
18. Return the server to an upright position.
19. Connect each power cord to the server.
20. Connect each power cord to the power source.
21. Power up the server (on page 16).

Drive options

The server supports up to four non-hot-plug LFF drives in the default configuration.

The embedded storage controller supports SATA drives only. To support SAS drives, install an HPE Host Bus Adapter or an HPE Smart Array controller.

The default drive cage may be replaced with an optional four-bay LFF hot-plug drive cage to support up to four hot-plug LFF drives.

The default drive cage may alternatively be replaced with an optional eight-bay SFF hot-plug drive cage to support up to eight hot-plug SFF drives. If the optional eight-bay SFF drive cage is installed, the server supports four SFF drives using the embedded storage controller. An optional storage controller is required to support up to eight SFF drives.

An optional drive enablement kit may be installed in each of the two media bays to support up to two additional LFF drives connected to the embedded SATA controller. If the RPS option is installed, only the upper media drive bay will be available for option installation.

Drive installation guidelines

When adding drives to the server, observe the following general guidelines:

- The system automatically sets all device numbers.

- Populate drive bays, based on the drive numbering sequence. Start from the drive bay with the lowest device number ("Drive numbering" on page 13).
- All drives grouped into the same drive array must meet the following criteria:
  - They must be either all SAS or all SATA.
  - They must be either all hard drives or all solid-state drives.
  - Drives should be the same capacity to provide the greatest storage space efficiency when drives are grouped together into the same drive array.

Installing a non-hot-plug drive

CAUTION: To prevent improper cooling and thermal damage, do not operate the server unless all bays are populated with either a component or a blank.

To install the component:

1. Power down the server (on page 16).
2. Remove all power:
   a. Disconnect each power cord from the power source.
   b. Disconnect each power cord from the server.
3. Remove the tower bezel ("Remove the bezel" on page 17).
4. Remove the access panel (on page 19).
5. Remove the air baffle (on page 20).
6. Disconnect all cables connected to any installed drives.
7. Remove the installed drive cage assembly.

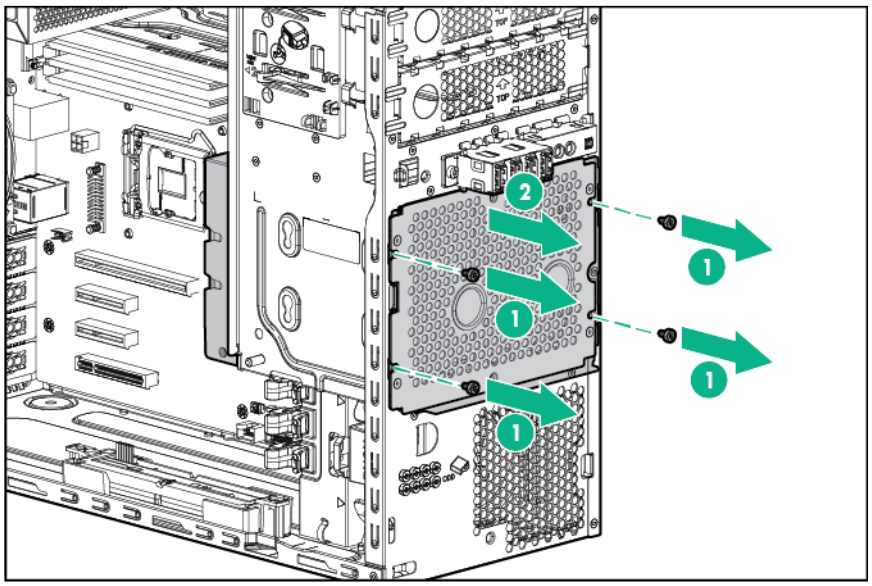

8. Use the screws on the drive cage to install the drives.

9. Install drives into the drive cage.

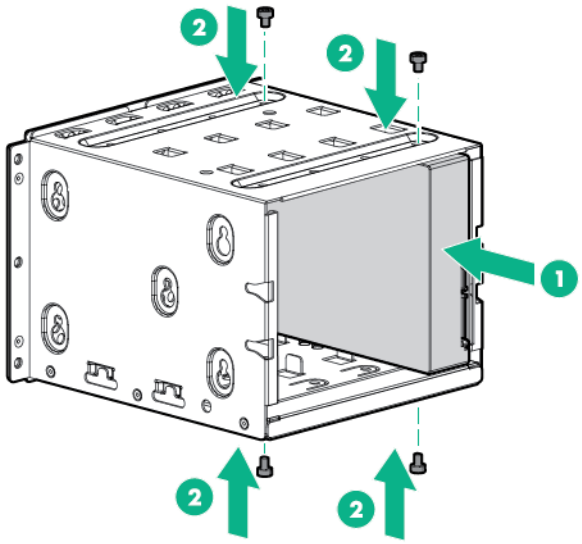

10. Install the drive cage into the chassis.

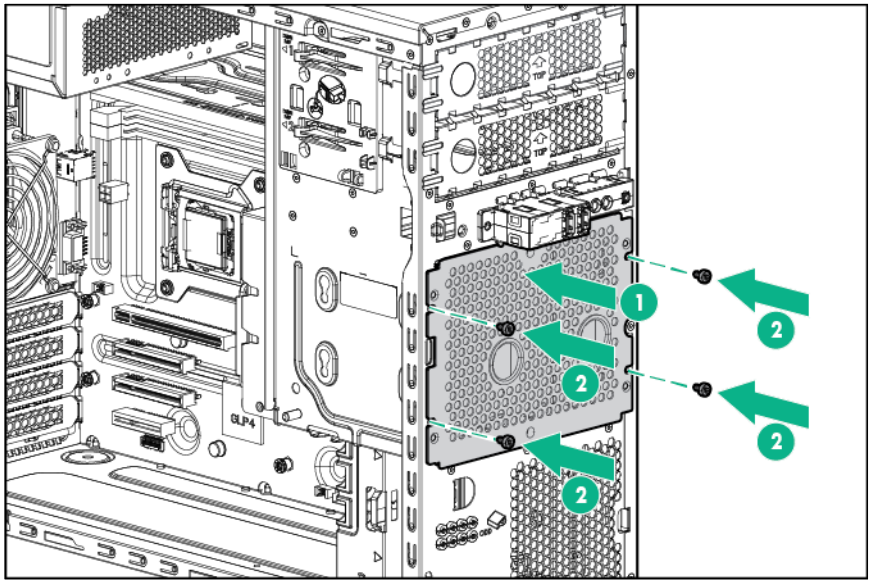

11. Connect all drive cables.

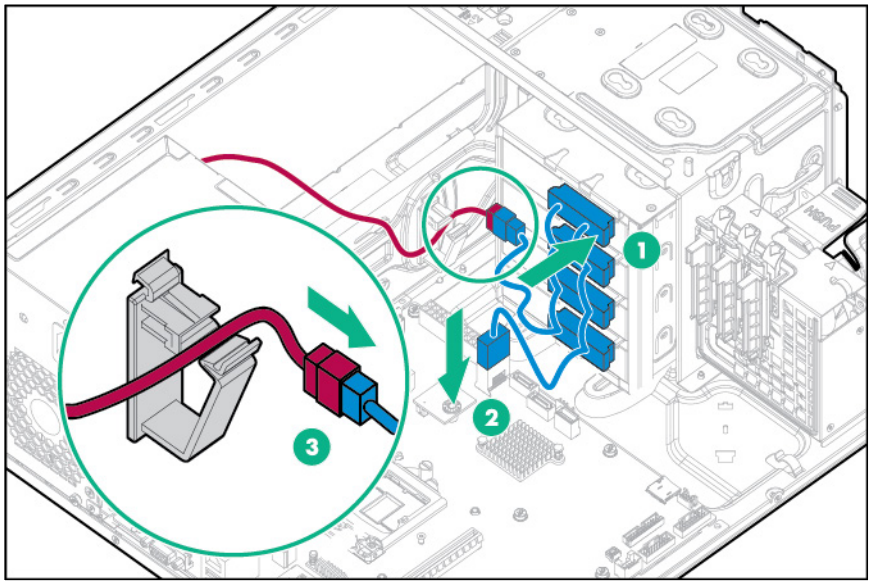

12. Install the air baffle (on page 19).
13. Install the access panel (on page 18).
14. Install the tower bezel ("Install the bezel" on page 17).
15. Connect each power cord to the server.
16. Connect each power cord to the power source.
17. Power up the server (on page 16).

Installing a hot-plug drive

CAUTION: To prevent improper cooling and thermal damage, do not operate the server unless all bays are populated with either a component or a blank.

To install the component:

1. Remove the tower bezel ("Remove the bezel" on page 17).
2. Remove the drive blank.

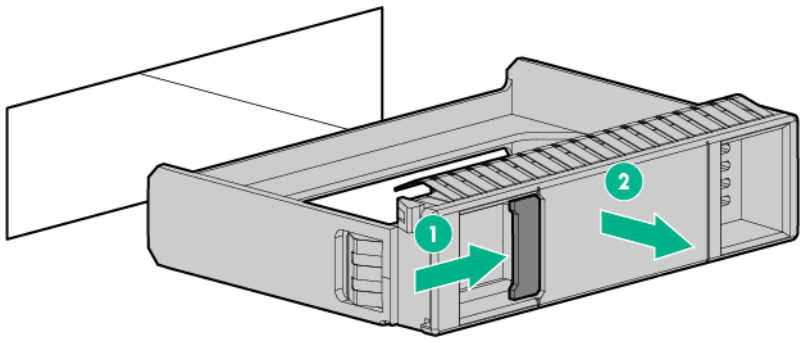

3. Prepare the drive.

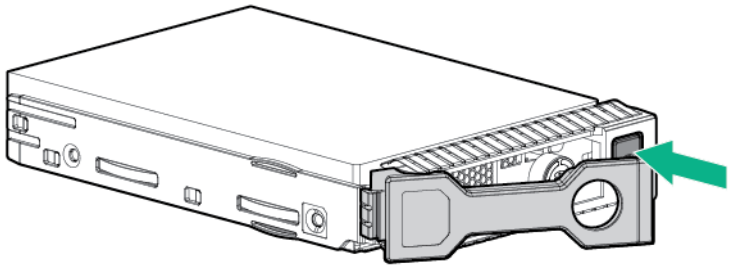

4. Install the drive.

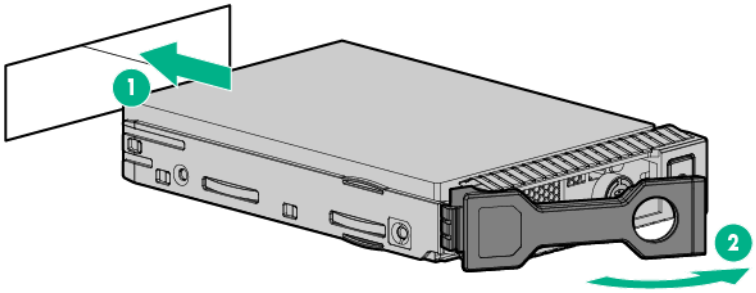

5. Determine the status of the drive from the drive LED definitions ("Hot-plug drive LED definitions" on page 14).

To configure arrays, see the *HPE Smart Storage Administrator User Guide* on the Hewlett Packard Enterprise website (**http://www.hpe.com/info/smartstorage/docs**).

Drive cable options

Use these drive cable options to support a Host Bus Adapter or a Smart Array Controller.

For more information about product features, specifications, options, configurations, and compatibility, see the product QuickSpecs on the Hewlett Packard Enterprise website (**http://www.hpe.com/info/qs**).

Host Bus Adapter Mini-SAS cable option

For more information about product features, specifications, options, configurations, and compatibility, see the product QuickSpecs on the Hewlett Packard Enterprise website (**http://www.hpe.com/info/qs**).

To install the component:

1. Back up all server data.
2. Power down the server (on page 16).
3. Remove all power:
   a. Disconnect each power cord from the power source.
   b. Disconnect each power cord from the server.
4. Remove the bezel (on page 17).
5. Place the server on its side with the access panel facing up.
6. Remove the access panel (on page 19).
7. Remove the air baffle (on page 20).

8. Disconnect the existing Mini-SAS cables from the drive backplane and the Mini-SAS connectors on the system board.
9. Connect one end of the cables to the Host Bus Adapter, route the cables through the cable clip, and then connect the cables to the drive backplane.

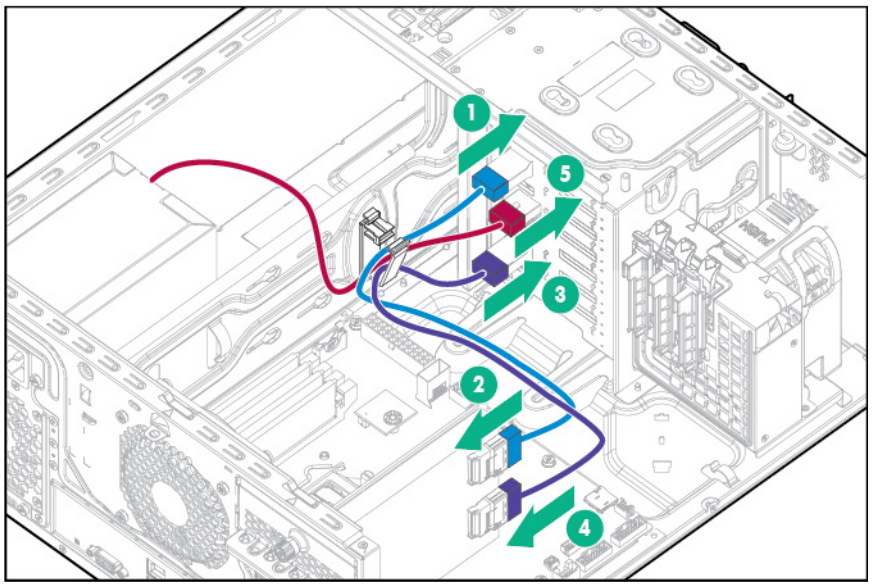

Item	Description
1	Port 1 drive backplane connection
2	Port 1 controller connection
3	Port 2 drive backplane connection
4	Port 2 controller connection
5	Power cable connection

10. Install the Host Bus Adapter ("Installing a storage controller and FBWC module options" on page 46).

    Storage controllers may be installed in PCIe slot 1 or 4. HPE recommends installing the H240/H241 Host Bus Adapter in slot 4 for optimal performance.
11. Install the air baffle (on page 19).
12. Install the access panel (on page 18).
13. Install the bezel (on page 17).
14. Return the server to an upright position.
15. Connect each power cord to the server.
16. Connect each power cord to the power source.
17. Power up the server (on page 16).

Smart Array Controller Mini-SAS cable option

For more information about product features, specifications, options, configurations, and compatibility, see the product QuickSpecs on the Hewlett Packard Enterprise website (**http://www.hpe.com/info/qs**).

To install the component:

1. Backup all server data.
2. Power down the server (on page 16).
3. Remove all power:

a. Disconnect each power cord from the power source.
b. Disconnect each power cord from the server.

4. Remove the bezel (on page 17).
5. Place the server on its side with the access panel facing up.
6. Remove the access panel (on page 19).
7. Remove the air baffle (on page 20).
8. Disconnect the existing Mini-SAS cables from the drive backplane and the Mini-SAS connectors on the system board.
9. Connect one end of the cable to the Smart Array Controller, route the cable through the cable clips, and then connect the other ends to the drive cage backplane.

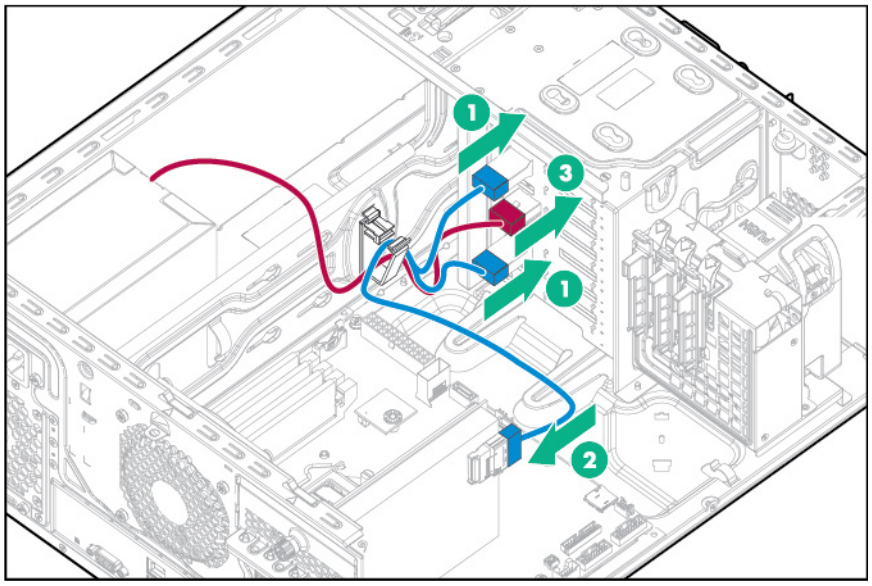

Item	Description
1	Port 1 and 2 drive backplane connection
2	Smart Array controller connection
3	Power cable connection

10. Install the Smart Array Controller ("Installing a storage controller and FBWC module options" on page 46).

    Storage controllers may be installed in PCIe slot 1 or 4, HPE recommends installing the P440/P441 Smart Array Controller in slot 4 for optimal performance.
11. Install the air baffle (on page 19).
12. Install the access panel (on page 18).
13. Install the bezel (on page 17).
14. Return the server to an upright position.
15. Connect each power cord to the server.
16. Connect each power cord to the power source.
17. Power up the server (on page 16).

Storage controller options

The server ships with an embedded Dynamic Smart Array B140i Controller. This embedded controller is supported in UEFI Boot Mode only. For more information about the controller and its features, see the *HPE Dynamic Smart Array B140i RAID Controller User Guide* on the Hewlett Packard Enterprise website (**http://www.hpe.com/info/smartstorage/docs**).

Upgrade options exist for an integrated array controller. For a list of supported options, see the product QuickSpecs on the Hewlett Packard Enterprise website (**http://www.hpe.com/info/qs**).

To configure arrays, see the *HPE Smart Storage Administrator User Guide* on the Hewlett Packard Enterprise website (**http://www.hpe.com/info/smartstorage/docs**).

The server supports FBWC. FBWC consists of a cache module and a Smart Storage Battery Pack. The DDR cache module buffers and stores data being written by an integrated Gen9 P-series Smart Array Controller.

This server supports the 96-W Smart Storage Battery Pack. This battery pack can support up to 24 devices. Devices in this context refer to the Smart Array Controller or NVDIMM associated with the cache module.

The battery pack might have a low charge when installed. If the battery does have low charge, a POST error message appears when the server is powered up, indicating that the battery pack is temporarily disabled. No action is necessary. The internal circuitry automatically recharges the batteries and enables the battery pack. When the system is powered on this process might take approximately 2 hours.

If a system power failure occurs, a fully charged battery pack provides power for up to 150 seconds. During that interval, the controller transfers the cached data from DDR memory to flash memory, where the data remains indefinitely or until a controller retrieves the data. The data protection and the time limit also apply if a power outage occurs. When power is restored to the system, an initialization process writes the preserved data to the storage drives.

△ **CAUTION:** The cache module connector does not use the industry-standard DDR3 mini-DIMMs. Do not use the controller with cache modules designed for other controller models, because the controller can malfunction and you can lose data. Also, do not transfer this cache module to an unsupported controller model, because you can lose data.

△ **CAUTION:** To prevent a server malfunction or damage to the equipment, do not add or remove the battery pack while an array capacity expansion, RAID level migration, or stripe size migration is in progress.

△ **CAUTION:** After the server is powered down, wait for 30 seconds, and then check the amber LED before unplugging the cable from the cache module. If the amber LED flashes after 30 seconds, do not remove the cable from the cache module. The cache module is backing up data. Data will be lost if the cable is detached when the amber LED is still flashing.

Storage controller installation guidelines

Storage controllers may be installed in slot 1 or 4. Hewlett Packard Enterprise recommends installing a storage controller in PCIe slot 4 for optimal performance.

An optional front PCI fan must be installed if any PCI cards are installed in the system.

Storage controllers additionally require the appropriate optional cable to connect to storage devices.

Installing a storage controller and FBWC module options

For more information about product features, specifications, options, configurations, and compatibility, see the product QuickSpecs on the Hewlett Packard Enterprise website (**http://www.hpe.com/info/qs**).

To install the component:

1. Back up all server data.
2. Power down the server (on page 16).
3. Remove all power:
   a. Disconnect each power cord from the power source.
   b. Disconnect each power cord from the server.
4. Remove the bezel (on page 17).
5. Place the server on its side with the access panel facing up.
6. Remove the access panel (on page 19).
7. Remove the air baffle (on page 20).
8. If you intend to use an FBWC module, install the module on the storage controller.
   a. If you are installing a Smart Array P440 Controller, remove the air scoop.

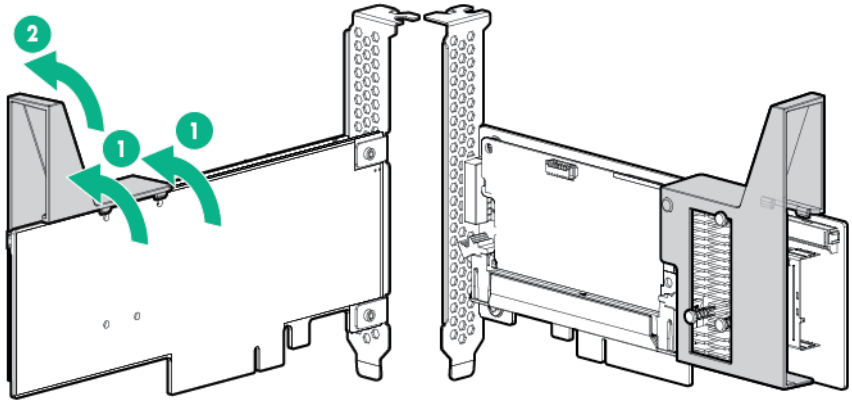

   b. Connect the cache module backup power cable to the module.

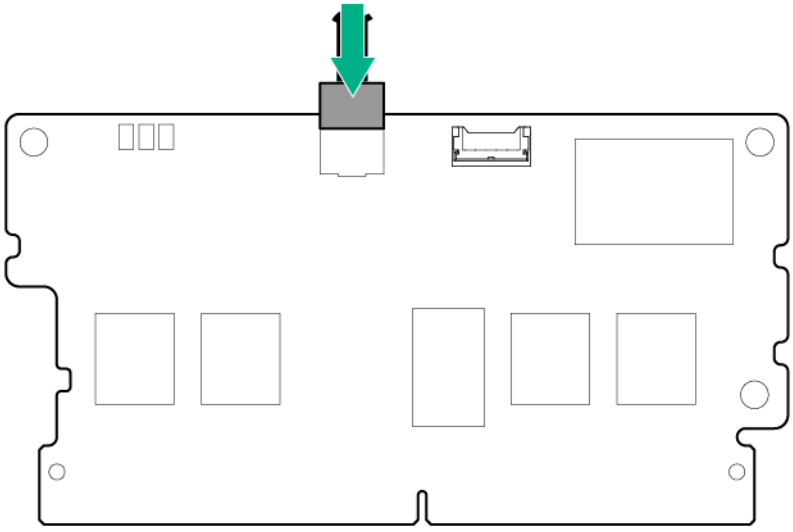

c. Install the cache module on the storage controller.

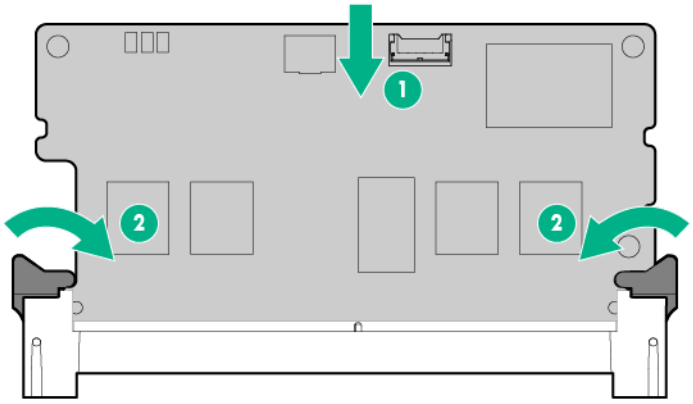

9. Locate the appropriate PCIe slot on the system board ("System board components" on page 10).
10. Open the PCIe slot cover retainer and remove the slot blank.

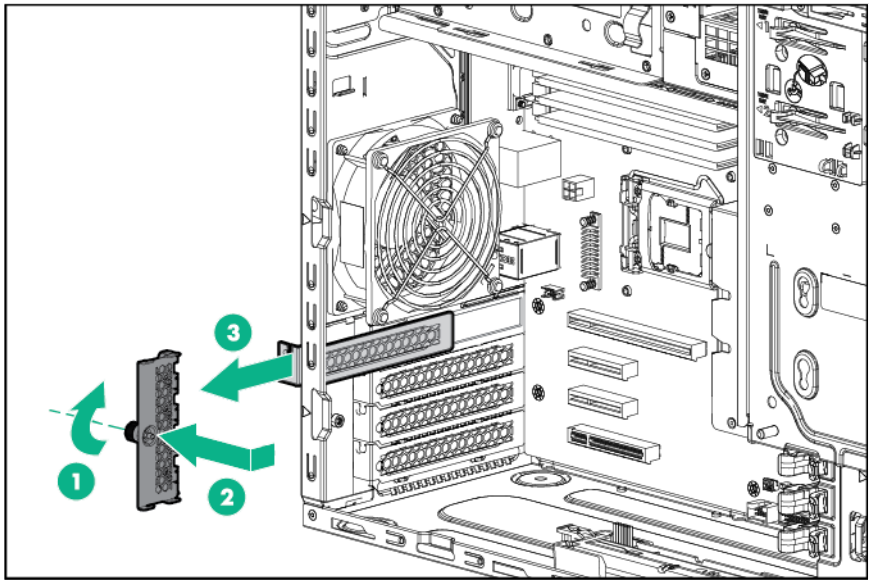

11. Install the storage controller.

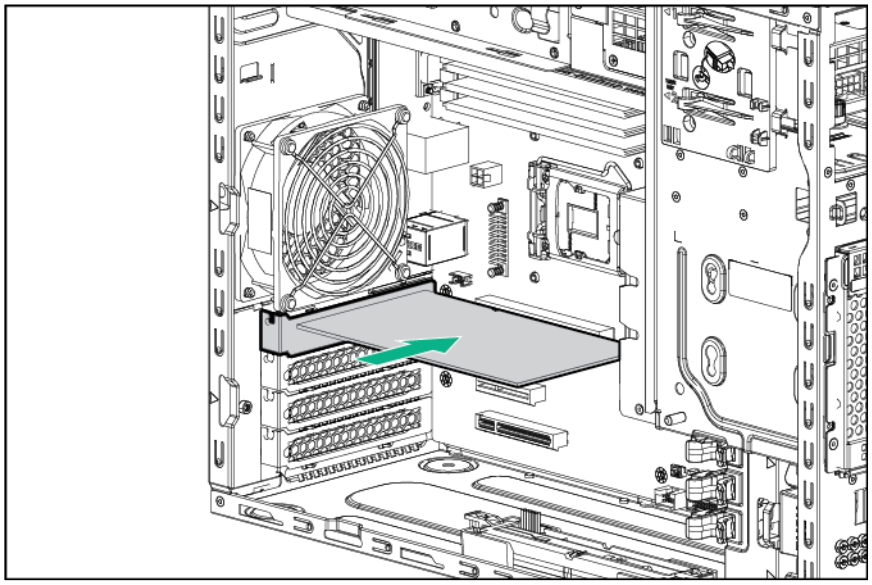

12. Install the PCIe slot cover retainer.
13. If you installed a cache module on the storage controller, connect the cache module cable to the system board connector. For cache module cabling information, see "FBWC module cabling ("FBWC cabling" on page 80)."
14. Connect all necessary cables to the storage controller and drive cage backplane. For internal drive cabling information, see "Storage cabling (on page 73)."
15. Install a front PCI fan ("Front PCI fan option" on page 26).
16. Install the air baffle (on page 19).
17. Install the access panel (on page 18).
18. Install the bezel (on page 17).
19. Return the server to an upright position.
20. Connect each power cord to the server.
21. Connect each power cord to the power source.
22. Power up the server (on page 16).

Installing a Smart Storage Battery

For more information about product features, specifications, options, configurations, and compatibility, see the product QuickSpecs on the Hewlett Packard Enterprise website (**http://www.hpe.com/info/qs**).

To install the component:

1. Power down the server (on page 16).
2. Remove all power:
   a. Disconnect each power cord from the power source.
   b. Disconnect each power cord from the server.
3. Remove the bezel (on page 17).
4. Place the server on its side with the access panel facing up.
5. Remove the access panel (on page 19).
6. Remove the air baffle (on page 20).

7. Remove the slot covers.

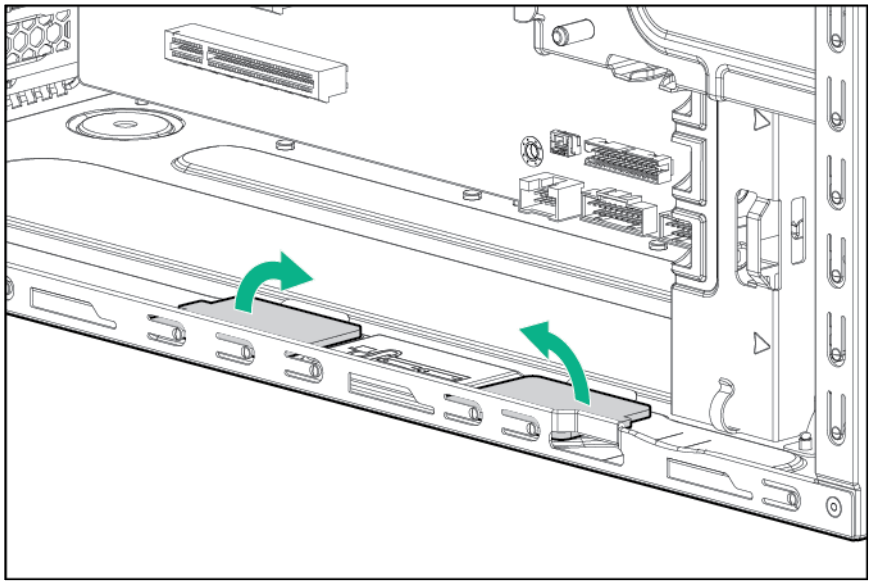

8. Install the Smart Storage Battery holders.

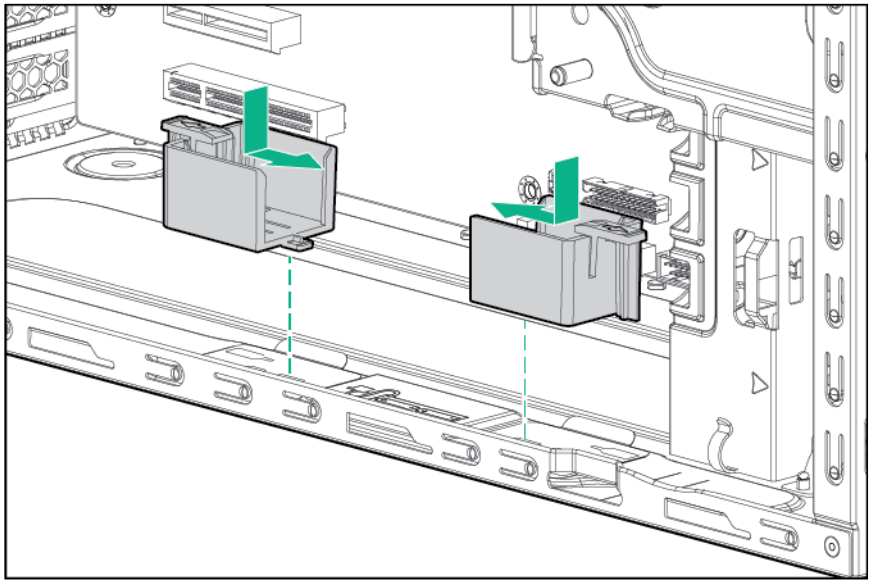

9. Install the Smart Storage Battery, then connect the battery cable to the Smart Storage Battery connector on the system board ("System board components" on page 10).

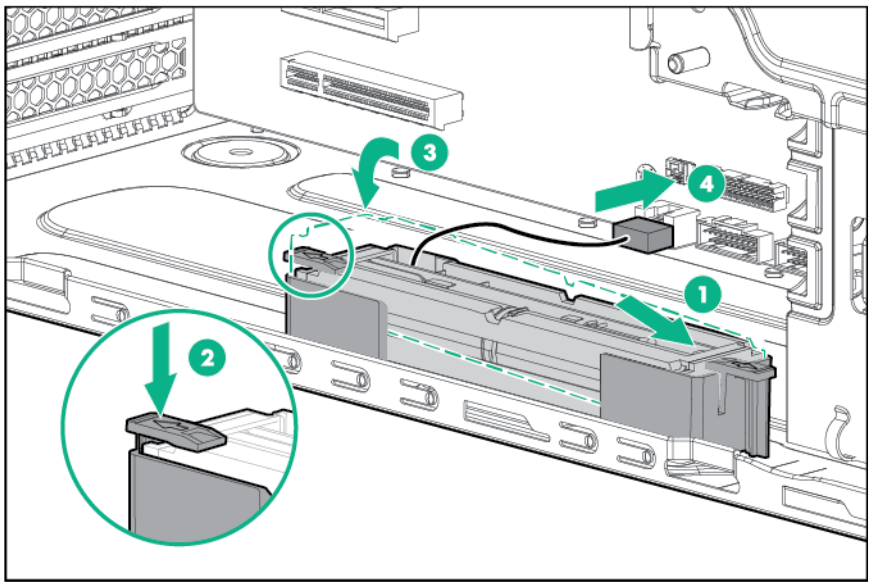

10. Install the air baffle (on page 19).
11. Install the access panel (on page 18).
12. Install the bezel (on page 17).
13. Return the server to an upright position.
14. Connect each power cord to the server.
15. Connect each power cord to the power source.
16. Power up the server (on page 16).

Drive enablement option

For more information about product features, specifications, options, configurations, and compatibility, see the product QuickSpecs on the Hewlett Packard Enterprise website (**http://www.hpe.com/info/qs**).

Each drive enablement option allows adding an additional SATA LFF drive to the server.

To install the component:

1. Back up all server data.
2. Power down the server (on page 16).
3. Remove all power:
   a. Disconnect each power cord from the power source.
   b. Disconnect each power cord from the server.
4. Remove the bezel (on page 17).
5. Place the server on its side with the access panel facing up.
6. Remove the access panel (on page 19).
7. Remove the air baffle (on page 20).

8. Remove the EMI shield.

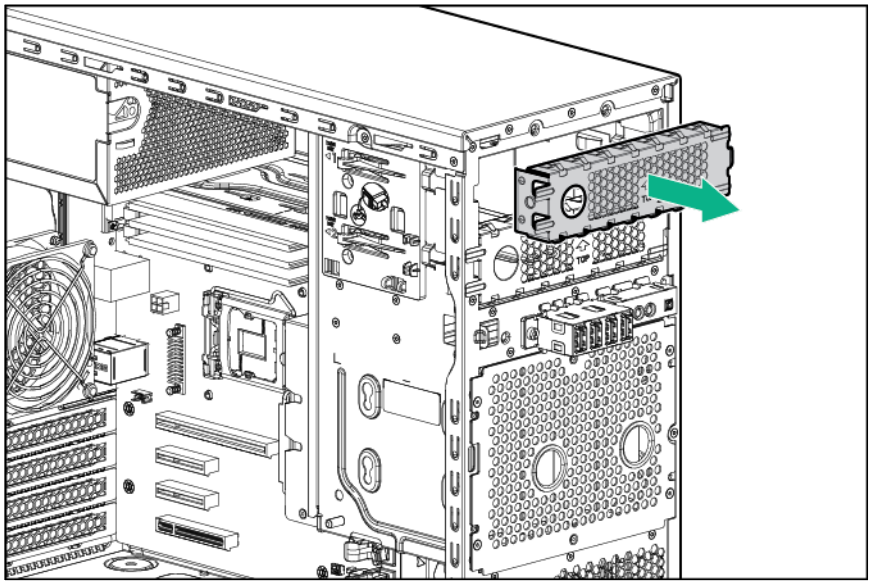

9. Install the drive into the drive carrier and secure it with four T-15 screws included with the option.

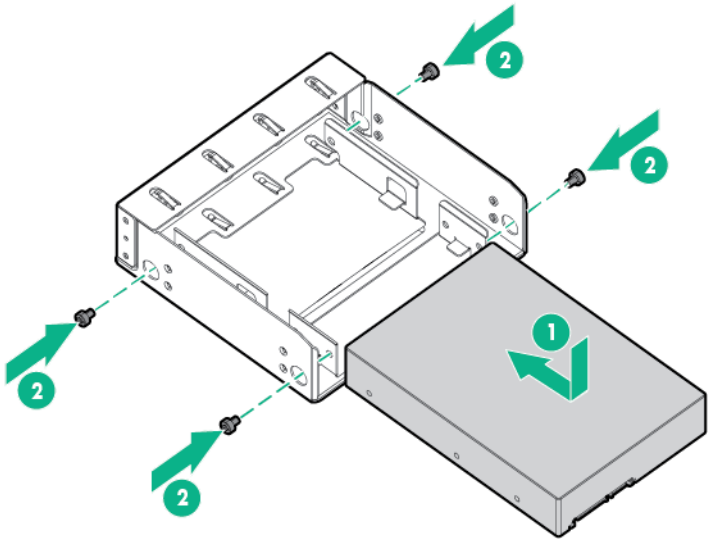

10. Secure M3 screws to the drive carrier. M3 screws can be found on the server front panel.

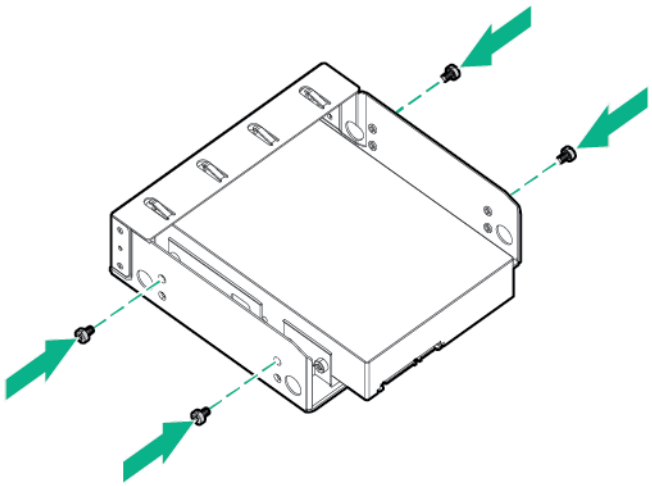

11. Insert the drive carrier into the media drive bay until the carrier locks into place.

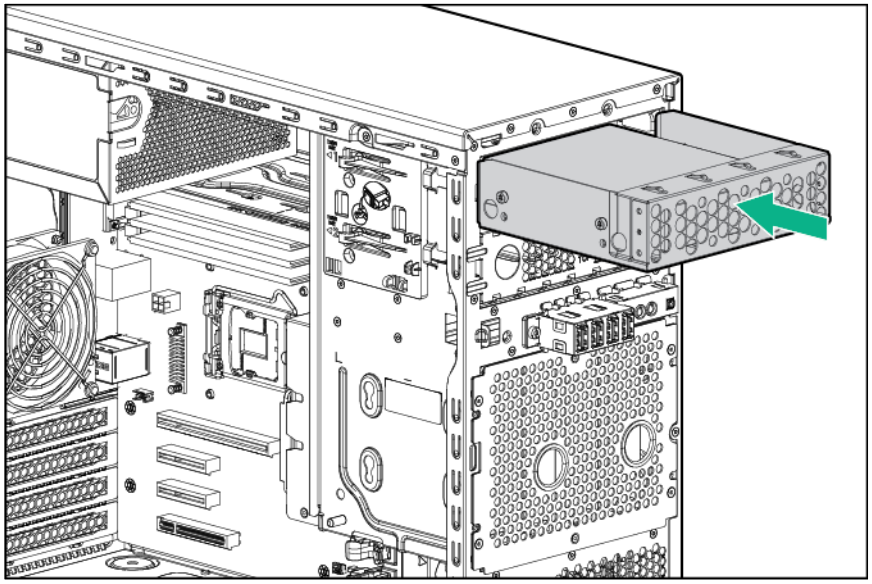

12. Connect the drive cables.
    a. Connect and secure the SATA cable.

b. Connect the power cable.

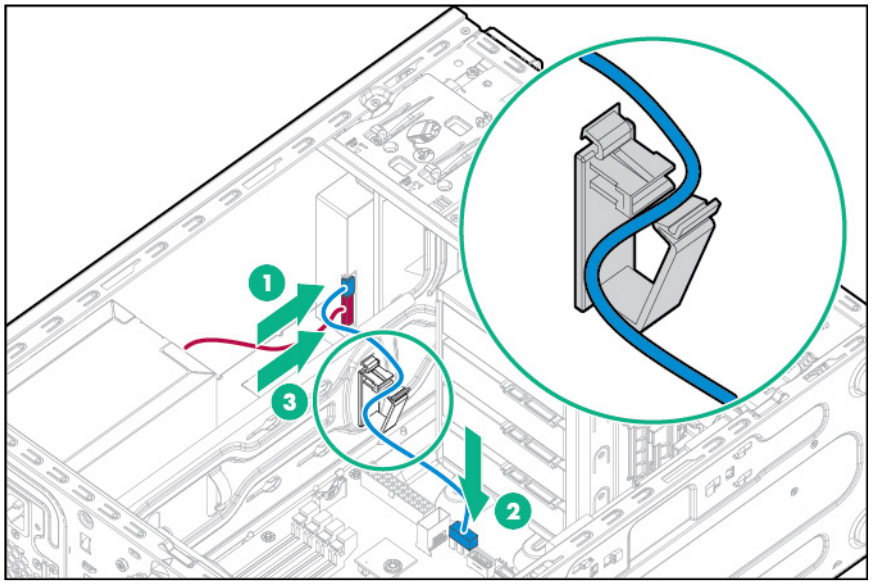

13. Install the air baffle (on page 19).
14. Install the access panel (on page 18).
15. Install the bezel (on page 17).
16. Return the server to an upright position.
17. Connect each power cord to the server.
18. Connect each power cord to the power source.
19. Power up the server (on page 16).

Tape drive option

For more information about product features, specifications, options, configurations, and compatibility, see the product QuickSpecs on the Hewlett Packard Enterprise website (**http://www.hpe.com/info/qs**).

To install the component:

1. Back up all server data.
2. Power down the server (on page 16).
3. Remove all power:
   a. Disconnect each power cord from the power source.
   b. Disconnect each power cord from the server.
4. Remove the bezel (on page 17).
5. Place the server on its side with the access panel facing up.
6. Remove the access panel (on page 19).
7. Remove the air baffle (on page 20).

8. Remove the EMI shield.

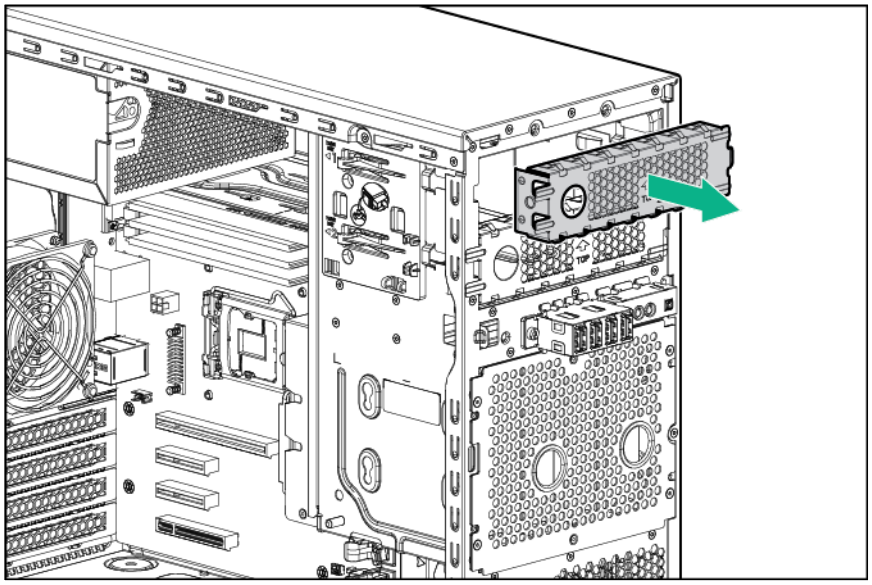

9. Insert the tape drive into the media drive bay.

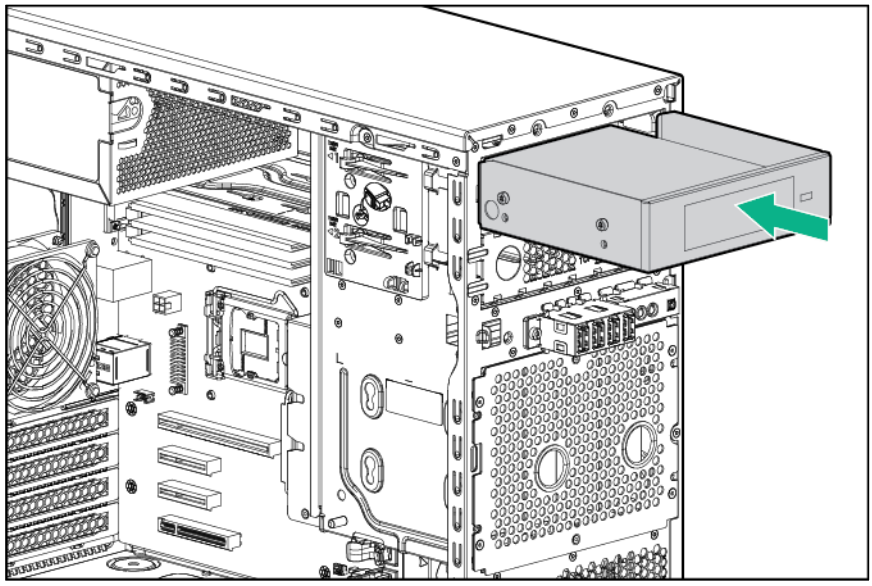

10. Connect the drive cables.
    a. Connect and secure the USB cable.
    b. Connect the power cables.

— 350W non-redundant power supply configuration

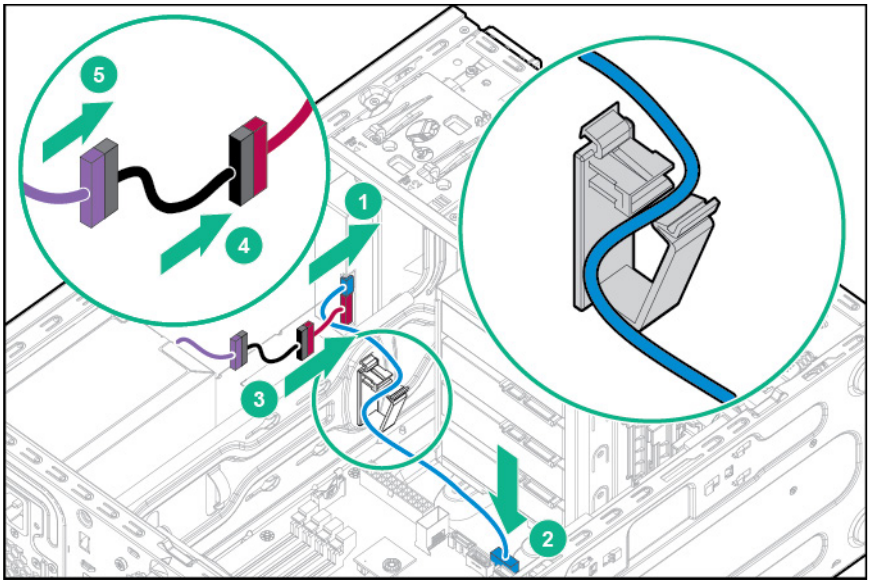

— Redundant power supply configuration

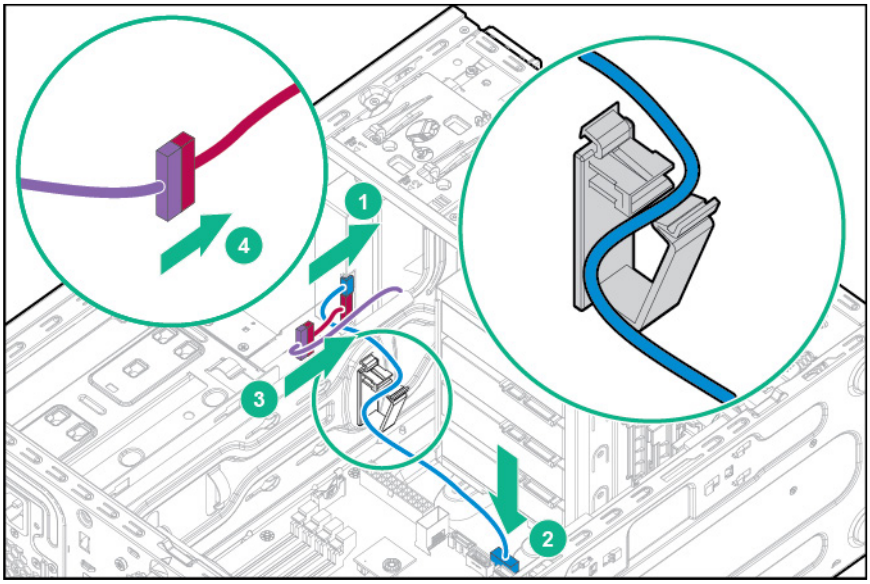

11. Install the air baffle (on page 19).
12. Install the access panel (on page 18).
13. Install the bezel (on page 17).
14. Return the server to an upright position.
15. Connect each power cord to the server.
16. Connect each power cord to the power source.
17. Power up the server (on page 16).

M.2 SSD enablement option

To install the component:

1. Power down the server (on page 16).

2. Remove all power:
   a. Disconnect each power cord from the power source.
   b. Disconnect each power cord from the server.
3. Remove the bezel (on page 17).
4. Place the server on its side with the access panel facing up.
5. Remove the access panel (on page 19).
6. Remove the air baffle (on page 20).
7. Install the SSD module onto the M.2 SSD enablement board:
   a. Insert the SSD module into the SSD slot at a 45 degree angle, and then gently press it down against the M.2 SSD Enablement board.
   b. Secure the SSD module to the M.2 SSD enablement board with a screw.
   c. Repeat the process if you are installing a second SSD module.

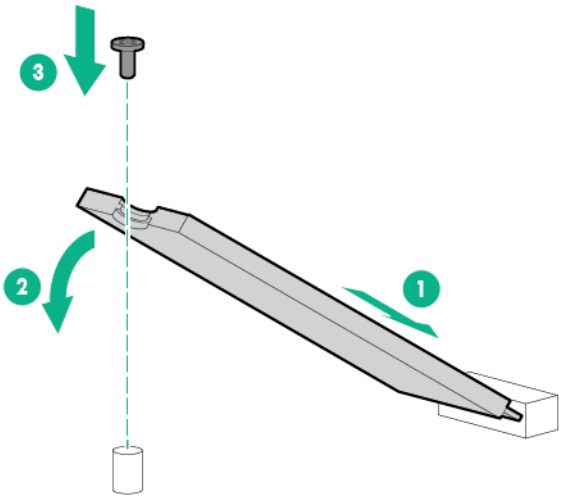

8. Open the PCIe slot cover retainer and remove the slot cover.

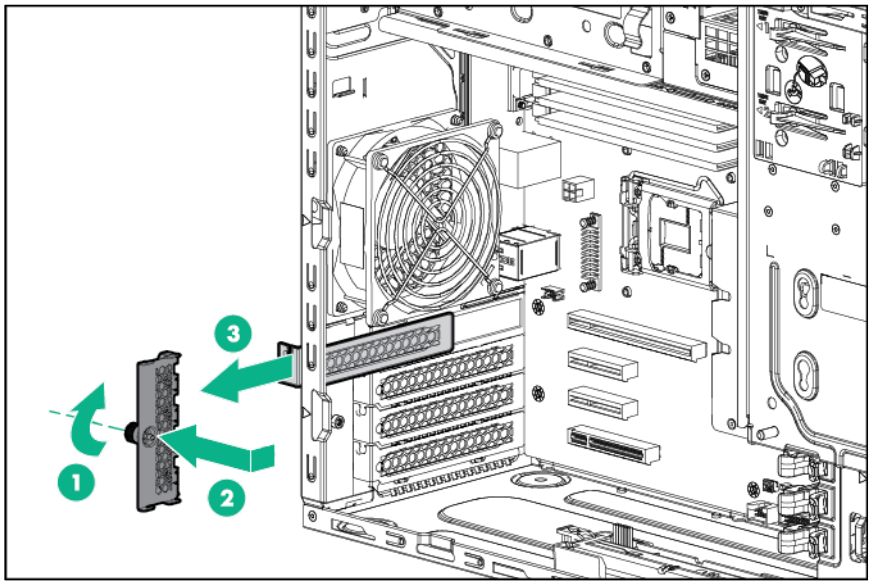

9. Install the M.2 SSD enablement board with SSD modules installed into PCIe slot 1 or 4.

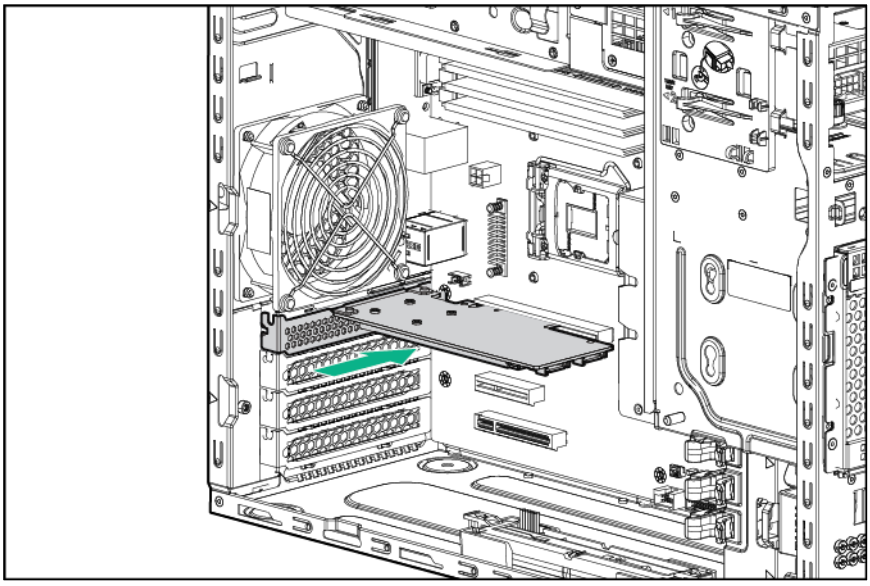

10. Close the PCIe slot cover retainer.
11. Connect the SATA cables to the enablement board. Connect the other end of the SATA cables to the SATA connectors on the system board. Port 1 to SATA 5 and port 2 to SATA 6.

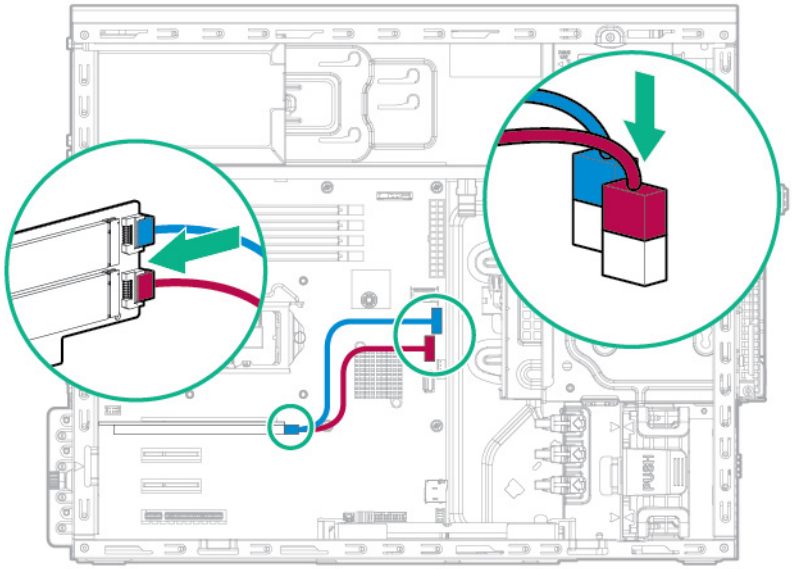

12. Install the air baffle (on page 19).
13. Install the access panel (on page 18).
14. Install the bezel (on page 17).
15. Return the server to an upright position.
16. Connect each power cord to the server.
17. Connect each power cord to the power source.
18. Power up the server (on page 16).

Four-bay LFF hot-plug drive cage option

For more information about product features, specifications, options, configurations, and compatibility, see the product QuickSpecs on the Hewlett Packard Enterprise website (**http://www.hpe.com/info/qs**).

To install the component:

1. Power down the server (on page 16).
2. Remove all power:
   a. Disconnect each power cord from the power source.
   b. Disconnect each power cord from the server.
3. Remove the bezel (on page 17).
4. Place the server on its side with the access panel facing up.
5. Remove the access panel (on page 19).
6. Remove the air baffle (on page 20).
7. Disconnect the non-hot-plug drive cable assembly from the drives and the system board.
8. Remove the non-hot-plug drive cage.

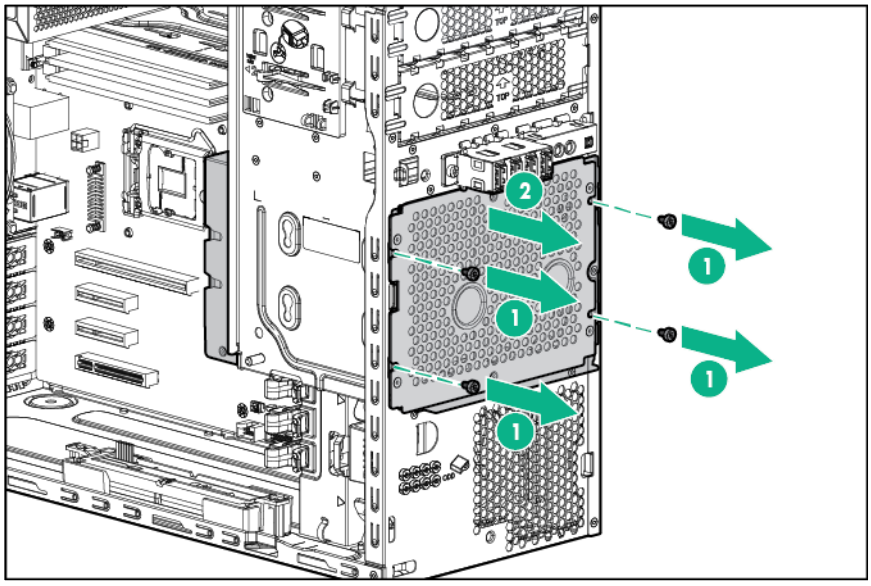

9. Install the drive cage assembly.

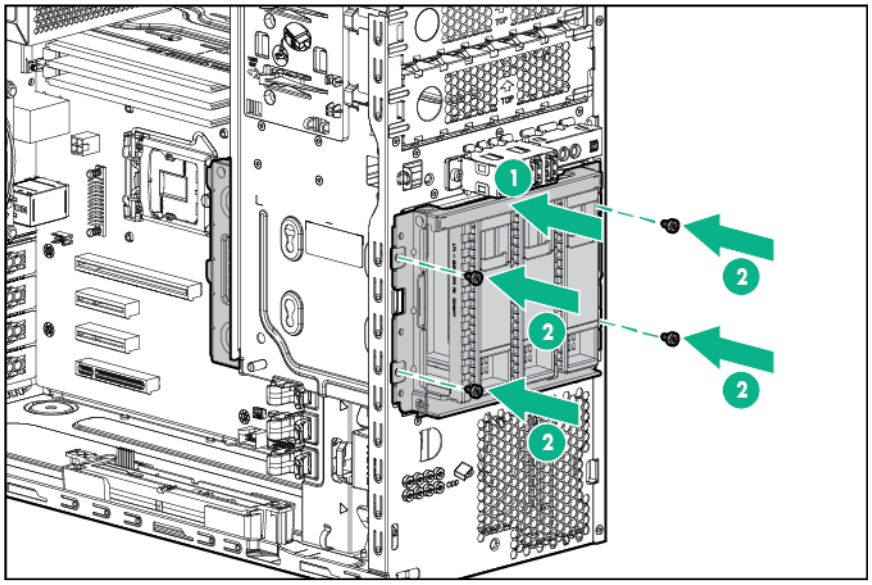

10. Connect the drive backplane cables:
    a. Connect one end of the Mini-SAS cable to the backplane and the other end to the system board.
    b. Connect the power cable to the backplane.

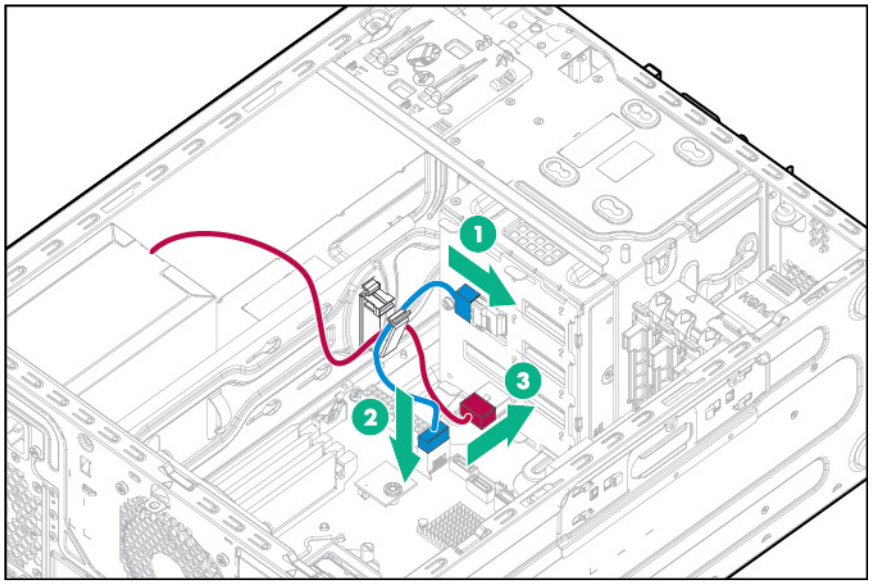

11. Install the hot-plug drives ("Installing a hot-plug drive" on page 42).

    The hot-plug drive cage allows accessing storage drives from the server front bezel. The hot-plug drive cage only supports hot-plug drives. Non-hot-plug drives installed in a hot-plug drive cage will fail.

    △ **CAUTION:** To prevent improper cooling and thermal damage, do not operate the server unless all bays are populated with either a component or a blank.

    Populate drive bays, based on the drive numbering sequence. Start from the drive bay with the lowest device number ("Drive numbering" on page 13).

12. Install the air baffle (on page 19).
13. Install the access panel (on page 18).
14. Install the bezel (on page 17).

15. Return the server to an upright position.
16. Connect each power cord to the server.
17. Connect each power cord to the power source.
18. Power up the server (on page 16).
19. Determine the status of the drive from the drive LEDs ("Hot-plug drive LED definitions" on page 14).

Eight-bay SFF hot-plug drive cage option

For more information about product features, specifications, options, configurations, and compatibility, see the product QuickSpecs on the Hewlett Packard Enterprise website (**http://www.hpe.com/info/qs**).

To install the component:

1. Power down the server (on page 16).
2. Remove all power:
   a. Disconnect each power cord from the power source.
   b. Disconnect each power cord from the server.
3. Remove the bezel (on page 17).
4. Place the server on its side with the access panel facing up.
5. Remove the access panel (on page 19).
6. Remove the air baffle (on page 20).
7. Disconnect the non-hot-plug drive cable assembly from the drives and the system board.
8. Remove the non-hot-plug drive cage.

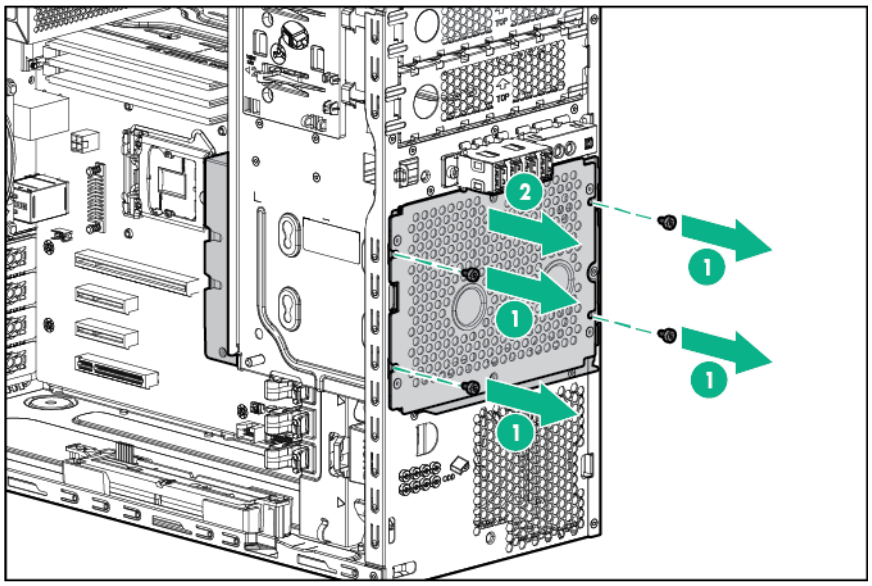

9. Install the drive cage assembly.

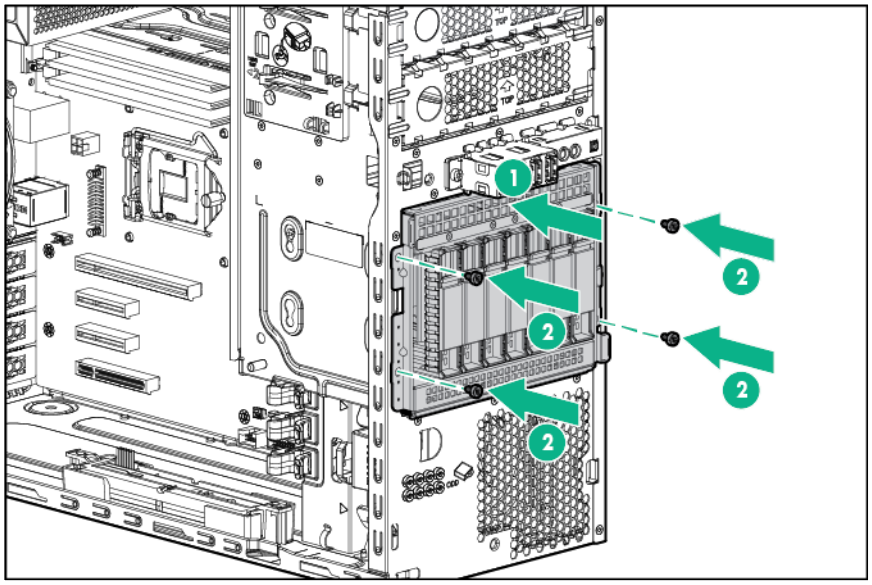

10. Connect the drive backplane cables:
    a. Connect one end of the Mini-SAS cable to the backplane and the other end to the system board.
    b. Connect the power cable to the backplane.
        — Mini-SAS cable connected from backplane connector 1 to the system board (4 drives supported)

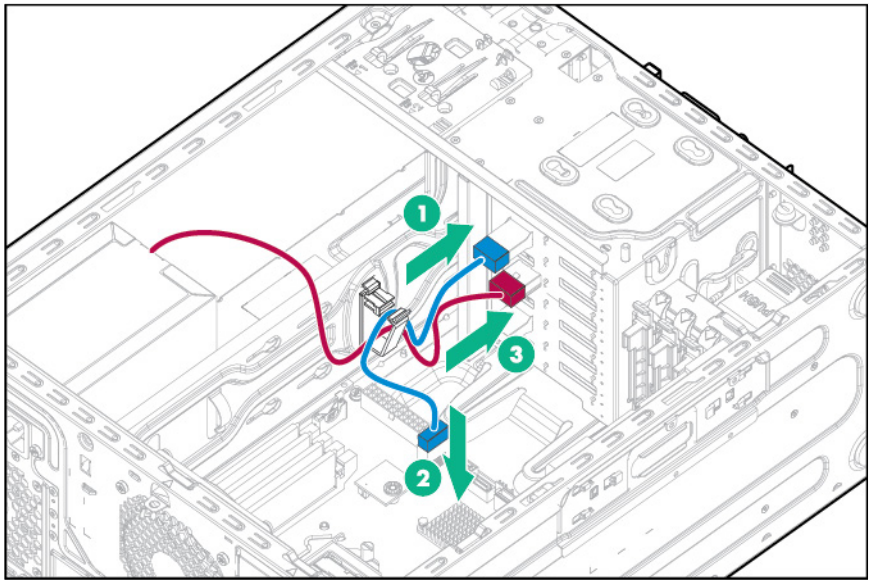

— Mini-SAS Y-cable connected from backplane connectors 1 and 2 to a Smart Array controller

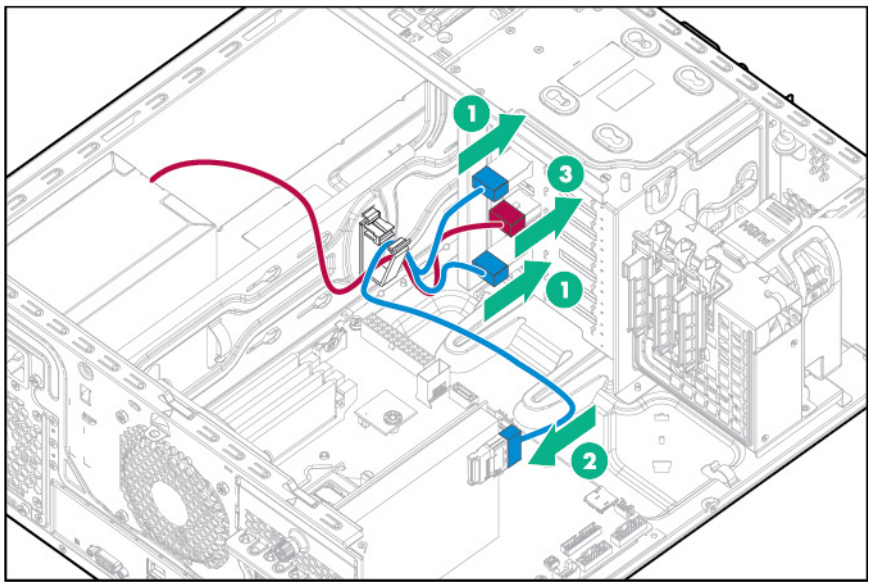

— Mini-SAS cables connected from backplane connectors 1 and 2 to a host bus adapter

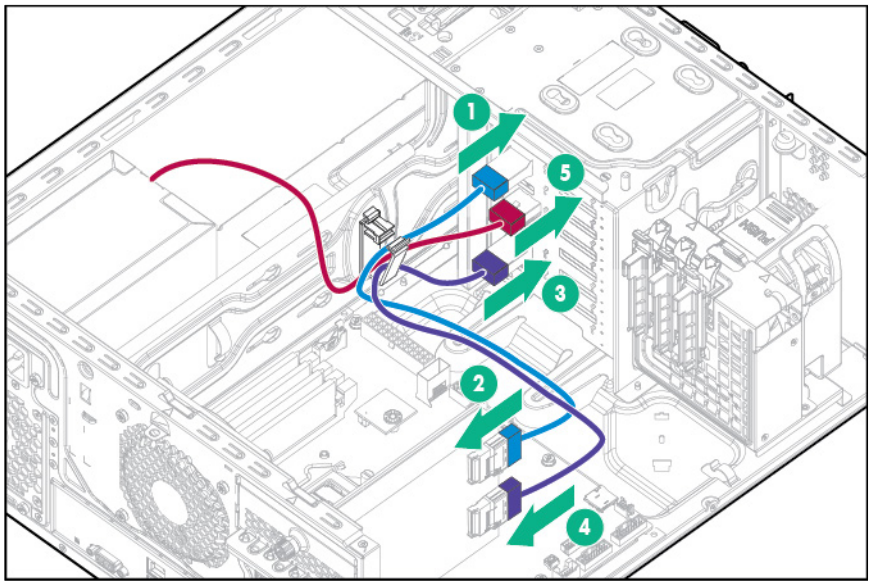

NOTE: A storage controller option is required to support more than 4 drives.

NOTE: To install more than 4 SFF drives in the drive cage, install a storage controller option.

11. Install the hot-plug drives ("Installing a hot-plug drive" on page 42).

    The hot-plug cage allows accessing storage drives from the server front bezel. The hot-plug drive cage only supports hot-plug drives. Non-hot-plug drives installed in a hot-plug cage will fail.

    △ **CAUTION:** To prevent improper cooling and thermal damage, do not operate the server unless all bays are populated with either a component or a blank.

    Populate drive bays, based on the drive numbering sequence. Start from the drive bay with the lowest device number ("Drive numbering" on page 13).

Port 1 of the hot-plug drive backplane supports drives 1 to 4. Port 2 of the hot-plug drive backplane supports drives 5 to 8.

12. Install a front PCI fan ("Front PCI fan option" on page 26).
13. Install the air baffle (on page 19).
14. Install the access panel (on page 18).
15. Install the bezel (on page 17).
16. Return the server to an upright position.
17. Connect each power cord to the server.
18. Connect each power cord to the power source.
19. Power up the server (on page 16).
20. Determine the status of the drive from the drive LED definitions ("Hot-plug drive LED definitions" on page 14).

microSD USB device

This server supports the installation of the Dual 8Gb microSD Enterprise Midline USB device on the server internal USB connector.

This USB storage device contains a dual-SD card module that supports up to two SD, SDHC, or SDXC storage cards providing data redundancy through a mirrored RAID-1 configuration. This USB storage device connects to an internal USB connector and is configured upon boot.

To locate the internal USB connector, see "System board components (on page 10)." For more information, see the Dual 8Gb microSD EM USB storage device documentation on the Hewlett Packard Enterprise website (**http://www.hpe.com/support/8GBDualMicrosd_ug_en**).

To install the component:

1. Power down the server (on page 16).
2. Remove all power:
   a. Disconnect each power cord from the power source.
   b. Disconnect each power cord from the server.
3. Remove the bezel (on page 17).
4. Place the server on its side with the access panel facing up.
5. Remove the access panel (on page 19).
6. Remove the air baffle (on page 20).

7. Install the device adapter on the system board.

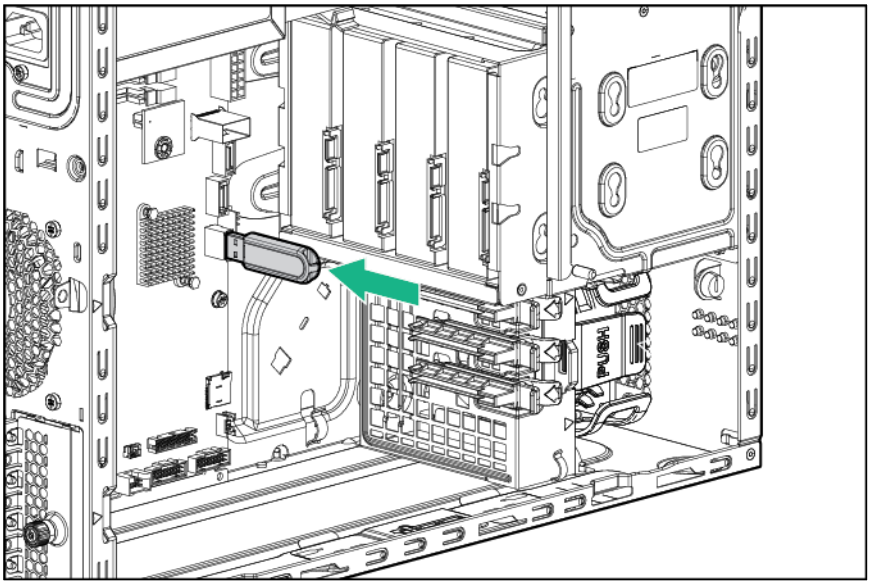

8. Install the air baffle (on page 19).
9. Install the access panel (on page 18).
10. Install the bezel (on page 17).
11. Return the server to an upright position.
12. Connect each power cord to the server.
13. Connect each power cord to the power source.
14. Power up the server (on page 16).

Memory options

The server supports dual-rank UDIMMs operating at a speed of up to 2133MHz. Depending on the processor model and the number of DIMMs installed, the memory clock speed might be reduced to 1333 or 1066 MHz. The server supports a maximum system memory of 64 GB, using 4-GB, 8-GB, and 16-GB UDIMMs.

Memory subsystem architecture

The memory subsystem in this server is divided into two channels. Each channel supports two DIMM slots.

Channel	Population order	Slot number
1	C A	1 2
2	D B	3 4

DIMM slots are identified by number and by letter. Letters identify the population order. Slot numbers are reported by ROM messages during boot and are used for error reporting.

For the DIMM slot locations, see "DIMM slot locations (on page 11)."

Single-, dual-, and quad-rank DIMMs

To understand and configure memory protection modes properly, an understanding of single-, dual-, and quad-rank DIMMs is helpful. Some DIMM configuration requirements are based on these classifications.

A single-rank DIMM has one set of memory chips that is accessed while writing to or reading from the memory. A dual-rank DIMM is similar to having two single-rank DIMMs on the same module, with only one rank accessible at a time. A quad-rank DIMM is, effectively, two dual-rank DIMMs on the same module. Only one rank is accessible at a time. The server memory control subsystem selects the proper rank within the DIMM when writing to or reading from the DIMM.

Dual- and quad-rank DIMMs provide the greatest capacity with the existing memory technology. For example, if current DRAM technology supports 8-GB single-rank DIMMs, a dual-rank DIMM would be 16 GB, and a quad-rank DIMM would be 32 GB.

LRDIMMs are labeled as quad-rank DIMMs. There are four ranks of DRAM on the DIMM, but the LRDIMM buffer creates an abstraction that allows the DIMM to appear as a dual-rank DIMM to the system. The LRDIMM buffer isolates the electrical loading of the DRAM from the system to allow for faster operation. This allows higher memory operating speed compared to quad-rank RDIMMs.

DIMM identification

To determine DIMM characteristics, see the label attached to the DIMM and refer to the following illustration and table.

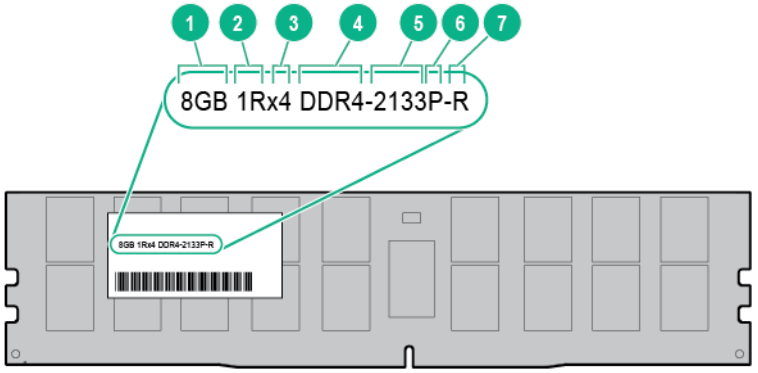

Item	Description	Definition
1	Capacity	8 GB 16 GB 32 GB 64 GB
2	Rank	1R = Single-rank 2R = Dual-rank 4R = Quad-rank
3	Data width on DRAM	x4 = 4-bit x8 = 8-bit
4	Memory generation	DDR4
5	Maximum memory speed	2133 MT/s 2400 MT/s
6	CAS latency	P=15 T=17
7	DIMM type	R = RDIMM (registered) L = LRDIMM (load reduced)

For more information about product features, specifications, options, configurations, and compatibility, see the product QuickSpecs on the Hewlett Packard Enterprise website (**http://www.hpe.com/info/qs**).

ECC memory

The server supports the standard ECC memory correction mode. Standard ECC can correct single-bit memory errors and detect multibit memory errors. When multibit errors are detected, the error is signaled to the server and causes the server to halt.

General DIMM slot population guidelines

- The server has four DIMM slots.
- The server supports two channels with two DIMM slots per channel.
  - Memory channel 1 consists of the two DIMMs that are closest to the processor.
  - Memory channel 2 consists of the two DIMMs that are farthest from the processor.
- A white DIMM slot indicates the first slot of a channel (2-A, 4-B).
- Memory speed support depends on the type of processor installed. For more information, see the technical specification of the installed processor.
- The server supports up to 2133 MT/s ECC UDIMMs.
- The server supports up to 64 GB (4x16 GB) UDIMMs.
- The server does not support:
  - RDIMMs
  - Non-ECC UDIMMs
- When installing DIMMs:
  - Populate the DIMM slots in this sequence: 2-A, 4-B, 1-C, 3-D.
  - Use HPE-qualified UDIMMs.

Installing a DIMM

For more information about product features, specifications, options, configurations, and compatibility, see the product QuickSpecs on the Hewlett Packard Enterprise website (**http://www.hpe.com/info/qs**).

To install the component:

1. Back up all server data.
2. Power down the server (on page 16).
3. Remove all power:
   a. Disconnect each power cord from the power source.
   b. Disconnect each power cord from the server.
4. Remove the bezel (on page 17).
5. Place the server on its side with the access panel facing up.
6. Remove the access panel (on page 19).
7. Remove the air baffle (on page 20).
8. Open the DIMM slot latches.

9. Install the DIMM.

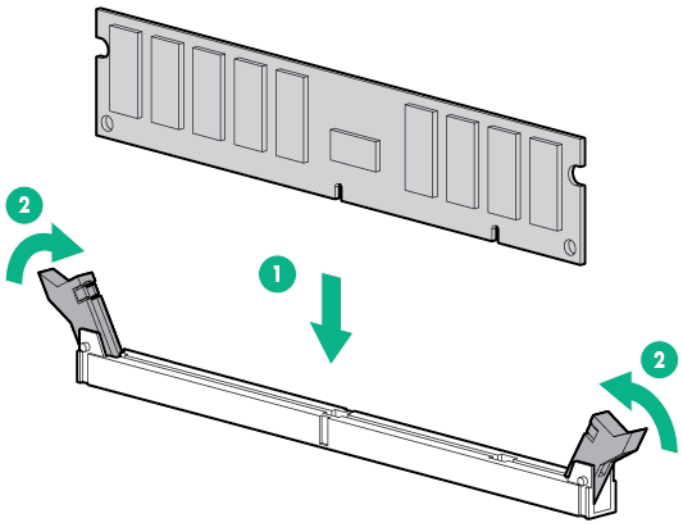

10. Install the air baffle (on page 19).
11. Install the access panel (on page 18).
12. Install the bezel (on page 17).
13. Return the server to an upright position.
14. Connect each power cord to the server.
15. Connect each power cord to the power source.
16. Power up the server (on page 16).

Use the BIOS/Platform Configuration (RBSU) in the UEFI System Utilities to configure the memory mode.

Setting up the HPE PS1810-24G Switch (optional)

If you intend to use the server with the companion PS 1810-24G Switch, follow the procedures in this section.

For more information on switch-related settings and operational procedures, see the documentation for your switch model on the Hewlett Packard Enterprise website (**http://www.hpe.com/networking/support**).

Mounting the switch with the server

Mount the switch in a rack, on a wall, or on top of or under a horizontal surface. For detailed instructions, see the *PS1810-24G Switch Quick Setup Guide*.

Connecting the server to the switch

To establish an Ethernet connection:

1. Connect an Ethernet cable to the switch, and then connect the cable to a network jack.
2. Connect an Ethernet cable to the server NIC connector 1 or 2.

3. Connect the cable to any switch network port.

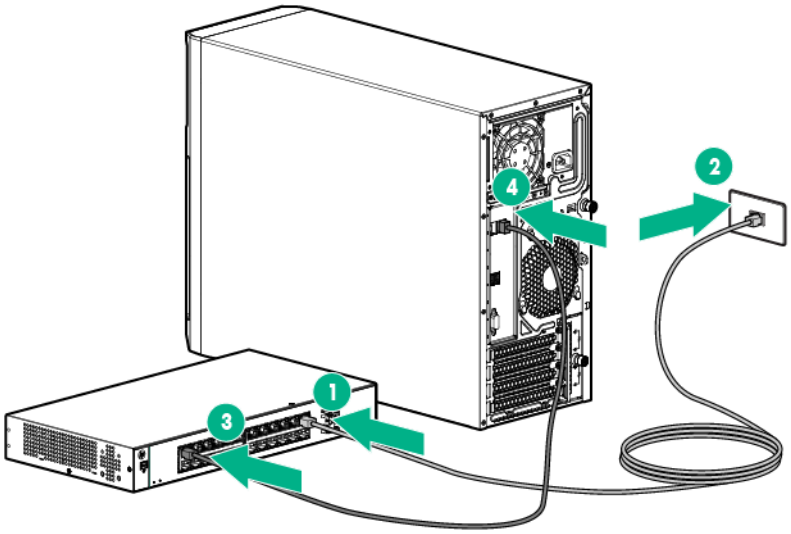

Completing the switch Self-Test

1. Connect the power adapter to the switch.
2. Connect the power adapter to the AC power source.
3. Check the status of the switch Power LED. This LED is solid green to indicate that the power connection is established.
4. Check the status of the following switch LEDs:
   - Link/Act LED on the switch network port that is being used—Initially, solid green to indicate successful connection, and then flashing green to indicate active communication with the network.
   - Fault LED—Remains off to indicate successful Self-Test completion.

   For more information on the location of the switch LEDs and their behavior during the Self-Test process, see the switch documentation.

Completing the switch setup

After the Ethernet cable connection is made, check the network LED status on both the server and the switch to confirm successful connection:

- In the server front panel, the NIC status LED —Solid green
- In the switch, the Link/Act LED on the network connector used—Initially, solid green to indicate successful connection, and then flashing green to indicate active communication with the network.

Trusted Platform Module option

For more information about product features, specifications, options, configurations, and compatibility, see the product QuickSpecs on the Hewlett Packard Enterprise website (**http://www.hpe.com/info/qs**).

Use these instructions to install and enable a TPM on a supported server. This procedure includes three sections:

1. Installing the Trusted Platform Module board (on page 70).
2. Retaining the recovery key/password (on page 71).
3. Enabling the Trusted Platform Module.

   Enabling the TPM requires accessing BIOS/Platform Configuration (RBSU) in the UEFI System Utilities (on page 90).

TPM installation requires the use of drive encryption technology, such as the Microsoft Windows BitLocker Drive Encryption feature. For more information on BitLocker, see the Microsoft website (**http://www.microsoft.com**).

> **CAUTION:** Always observe the guidelines in this document. Failure to follow these guidelines can cause hardware damage or halt data access.

When installing or replacing a TPM, observe the following guidelines:

- Do not remove an installed TPM. Once installed, the TPM becomes a permanent part of the system board.
- When installing or replacing hardware, Hewlett Packard Enterprise service providers cannot enable the TPM or the encryption technology. For security reasons, only the customer can enable these features.
- When returning a system board for service replacement, do not remove the TPM from the system board. When requested, Hewlett Packard Enterprise Service provides a TPM with the spare system board.
- Any attempt to remove an installed TPM from the system board breaks or disfigures the TPM security rivet. Upon locating a broken or disfigured rivet on an installed TPM, administrators should consider the system compromised and take appropriate measures to ensure the integrity of the system data.
- When using BitLocker, always retain the recovery key/password. The recovery key/password is required to enter Recovery Mode after BitLocker detects a possible compromise of system integrity.
- Hewlett Packard Enterprise is not liable for blocked data access caused by improper TPM use. For operating instructions, see the encryption technology feature documentation provided by the operating system.

Installing the Trusted Platform Module board

> **WARNING:** To reduce the risk of personal injury from hot surfaces, allow the drives and the internal system components to cool before touching them.

1. Power down the server (on page 16).
2. Remove all power:
   a. Disconnect each power cord from the power source.
   b. Disconnect each power cord from the server.
3. Remove the bezel (on page 17).
4. Place the server on its side with the access panel facing up.
5. Remove the access panel (on page 19).
6. Remove the air baffle (on page 20).

> **CAUTION:** Any attempt to remove an installed TPM from the system board breaks or disfigures the TPM security rivet. Upon locating a broken or disfigured rivet on an installed TPM, administrators should consider the system compromised and take appropriate measures to ensure the integrity of the system data.

7. Install the TPM board. Press down on the connector to seat the board ("System board components" on page 10).

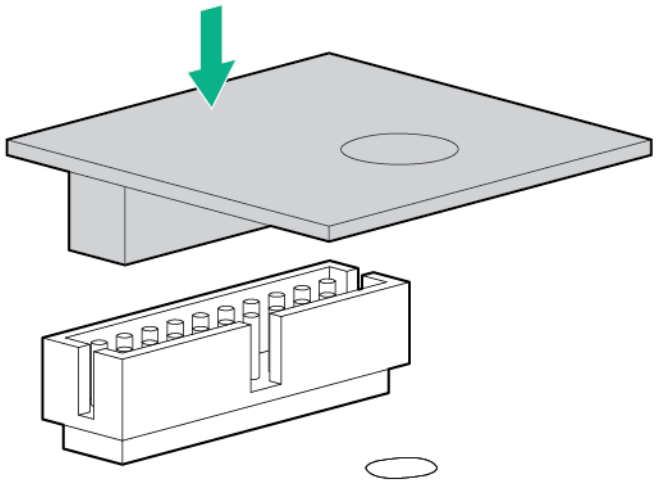

8. Install the TPM security rivet by pressing the rivet firmly into the system board.

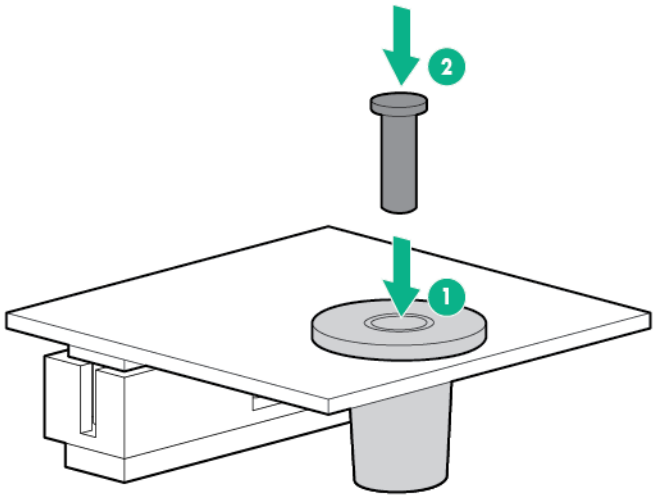

9. Install the air baffle (on page 19).
10. Install the access panel (on page 18).
11. Install the bezel (on page 17).
12. Return the server to an upright position.
13. Connect each power cord to the server.
14. Connect each power cord to the power source.
15. Power up the server (on page 16).

Retaining the recovery key/password

The recovery key/password is generated during BitLocker setup, and can be saved and printed after BitLocker is enabled. When using BitLocker, always retain the recovery key/password. The recovery key/password is required to enter Recovery Mode after BitLocker detects a possible compromise of system integrity.

To help ensure maximum security, observe the following guidelines when retaining the recovery key/password:

- Always store the recovery key/password in multiple locations.
- Always store copies of the recovery key/password away from the server.
- Do not save the recovery key/password on the encrypted hard drive.

Enabling the Trusted Platform Module

1. During the server startup sequence, press the **F9** key to access System Utilities.
2. From the System Utilities screen, select **System Configuration** > **BIOS/Platform Configuration (RBSU)** > **Server Security**.
3. Select **Trusted Platform Module Options** and press the **Enter** key**.**
4. Select **Enabled** to enable the TPM and BIOS secure startup. The TPM is fully functional in this mode.
5. Press the **F10** key to save your selection.
6. When prompted to save the change in System Utilities, press the **Y** key.
7. Press the **ESC** key to exit System Utilities. Then, press the **Enter** key when prompted to reboot the server.

The server then reboots a second time without user input. During this reboot, the TPM setting becomes effective.

You can now enable TPM functionality in the OS, such as Microsoft Windows BitLocker or measured boot.

△ **CAUTION:** When a TPM is installed and enabled on the server, data access is locked if you fail to follow the proper procedures for updating the system or option firmware, replacing the system board, replacing a hard drive, or modifying OS application TPM settings.

For more information on firmware updates and hardware procedures, see the *Trusted Platform Module Best Practices White Paper* on the Hewlett Packard Enterprise Support Center website (**http://www.hpe.com/support/hpesc**).

For more information on adjusting TPM usage in BitLocker, see the Microsoft website (**http://technet.microsoft.com/en-us/library/cc732774.aspx**).

Cabling

Cabling overview

This section provides guidelines to help make informed decisions about cabling the server and hardware options to optimize performance.

For information on cabling peripheral components, see the white paper on high-density deployment at the Hewlett Packard Enterprise website. (**http://www.hpe.com/products/servers/platforms**)

△ **CAUTION:** When routing cables, always be sure that the cables are not in a position where they can be pinched or crimped.

Storage cabling

Drive enablement option cabling

- Drive enablement option to 350W power supply

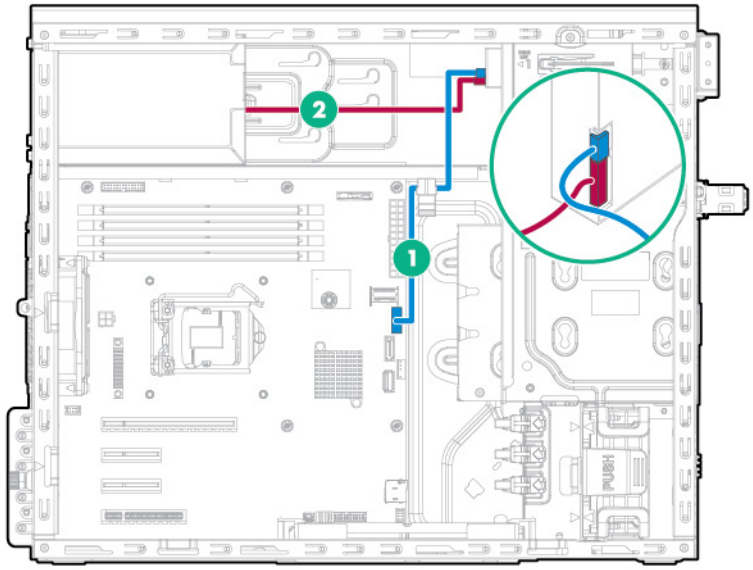

Item	Description
1	SATA cable
2	Drive power cable

- Drive enablement option to redundant power supply

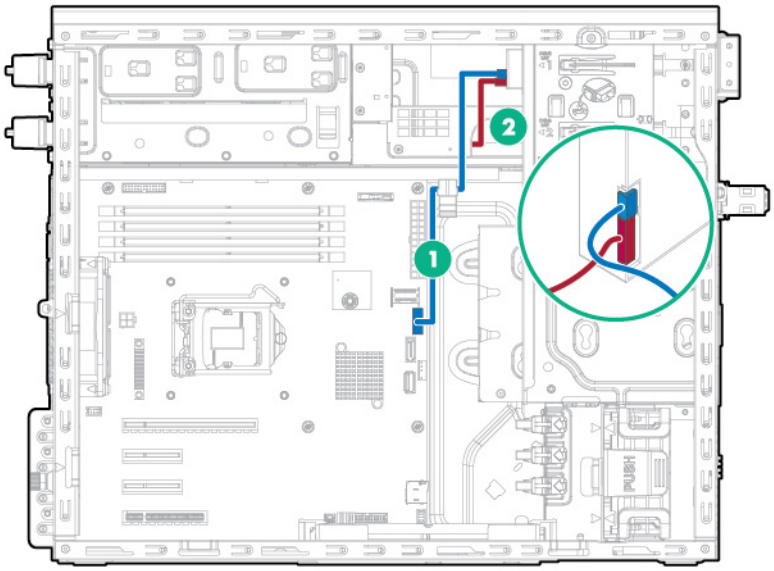

Item	Description
1	SATA cable
2	Drive power cable

Tape drive option cabling

- Tape drive option to 350W power supply

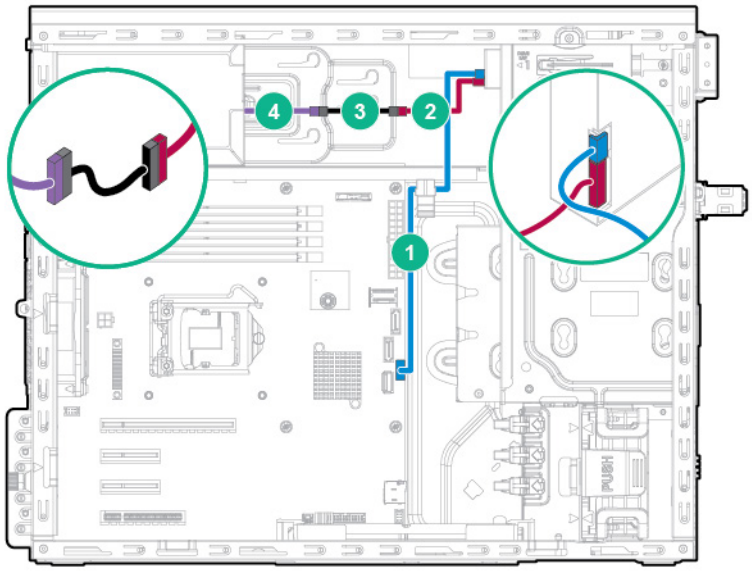

Item	Description
1	USB cable
2	Drive power cable
3	Power extension cable
4	Power supply cable

- Tape drive option to redundant power supply

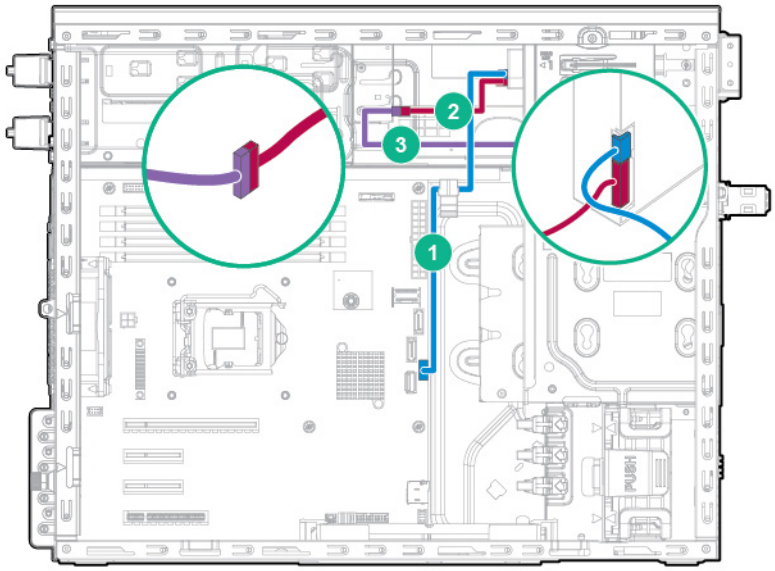

Item	Description
1	USB cable
2	Drive power cable
3	Power supply cable

Four-bay LFF non-hot-plug drive cage cabling

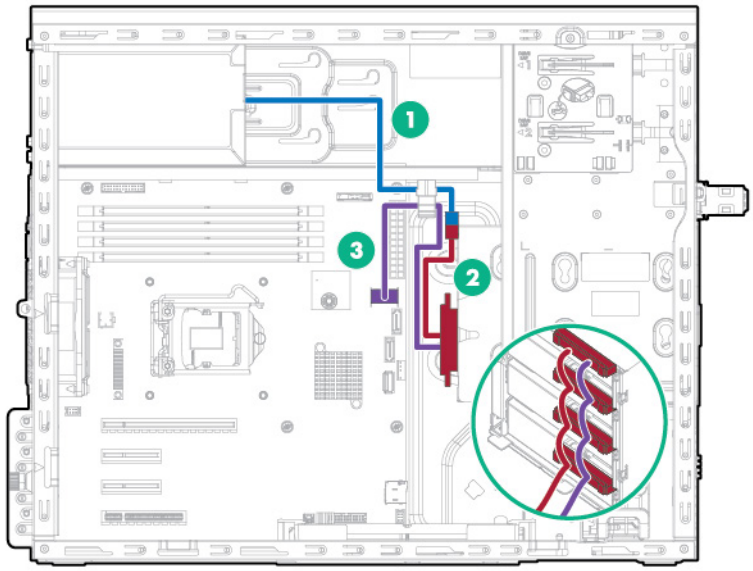

Item	Description
1	Power cable
2	10-pin to 8-pin power extension cable
3	Mini-SAS cable

Four-bay LFF hot-plug drive cage cabling

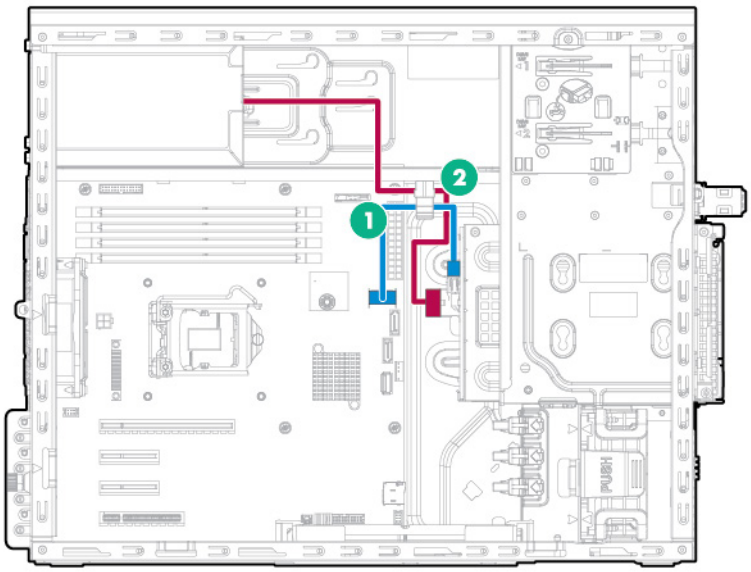

Item	Description
1	Mini-SAS cable
2	Power cable

Eight-bay SFF hot-plug drive cage cabling

- Eight-bay SFF hot-plug drive cage cabling to system board (supports up to 4 drives)

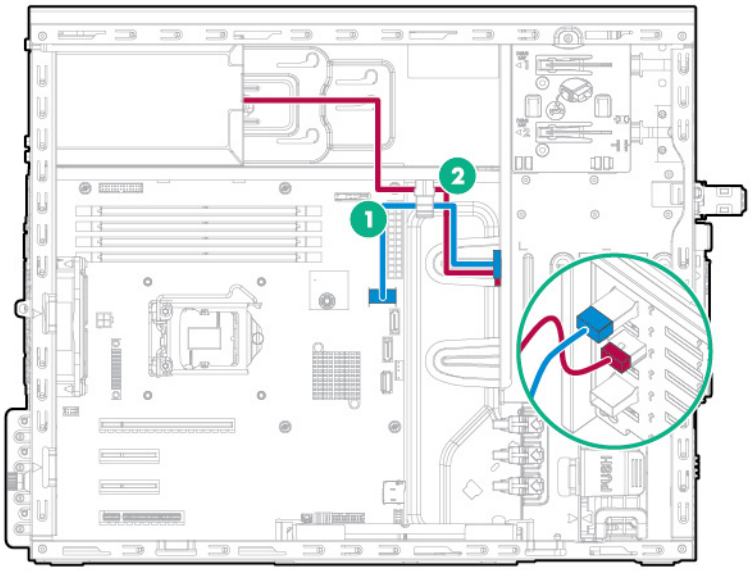

Item	Description
1	Mini-SAS cable
2	Power cable

- Eight-bay SFF hot-plug drive cage cabling to Smart Array controller (supports up to 8 drives)

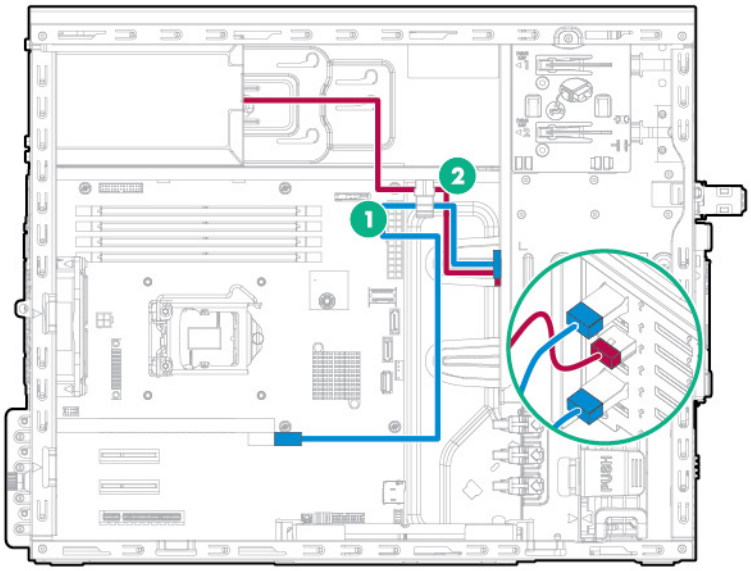

Item	Description
1	Mini-SAS Y-cable
2	Power cable

- Eight-bay SFF hot-plug drive cage cabling to host bus adapter (supports up to 8 drives)

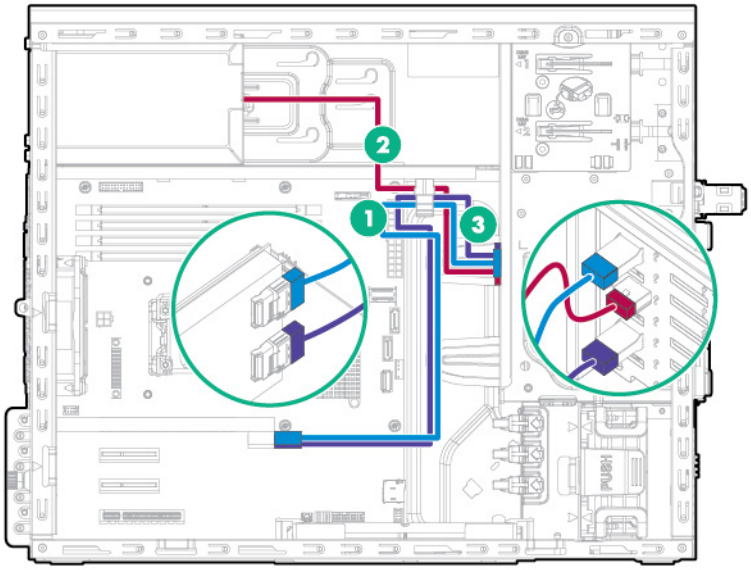

Item	Description
1	Mini-SAS cable
2	Power cable
3	Mini-SAS cable

M.2 SSD cabling

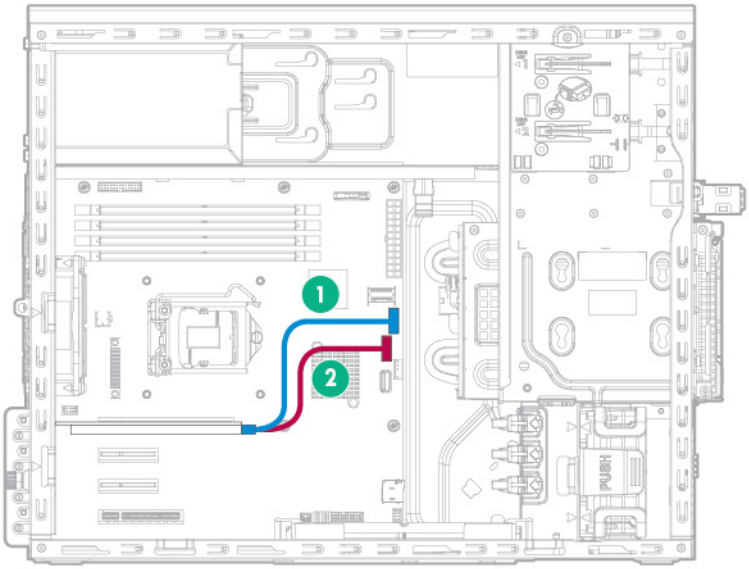

Item	Description
1	M.2 SSD 1 SATA cable
2	M.2 SSD 2 SATA cable

Slim optical disk drive cabling

- Slim optical disk drive to 350W power supply

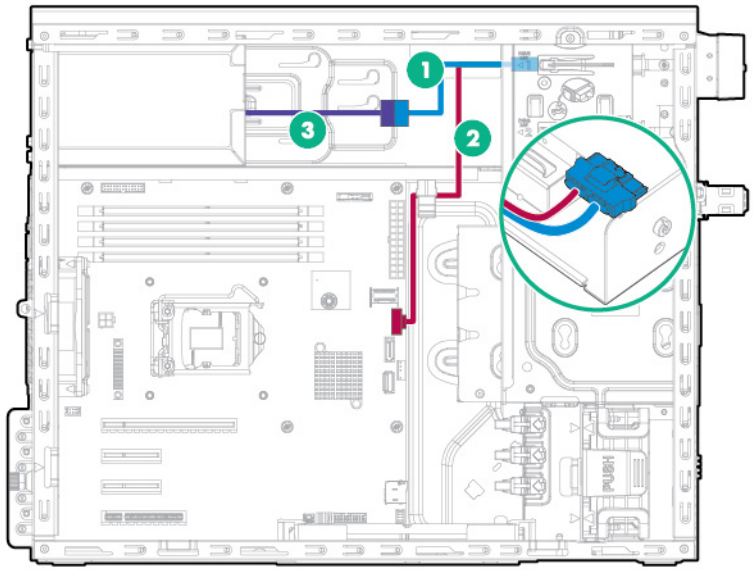

Item	Description
1	Optical disk drive power cable
2	SATA cable
3	4-pin power cable to 4-pin power supply extension cable

- Slim optical disk drive to redundant power supply

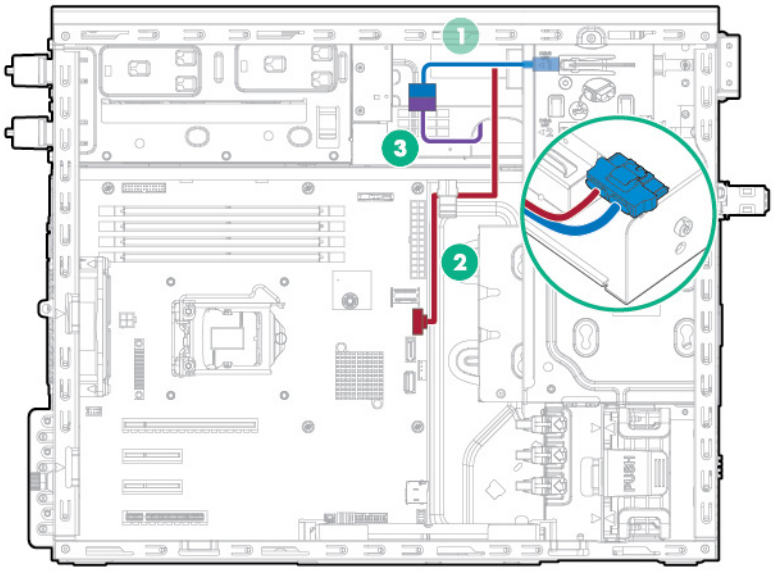

Item	Description
1	Optical disk drive power cable
2	SATA cable
3	4-pin power cable to 4-pin power supply extension cable

Front I/O module cabling

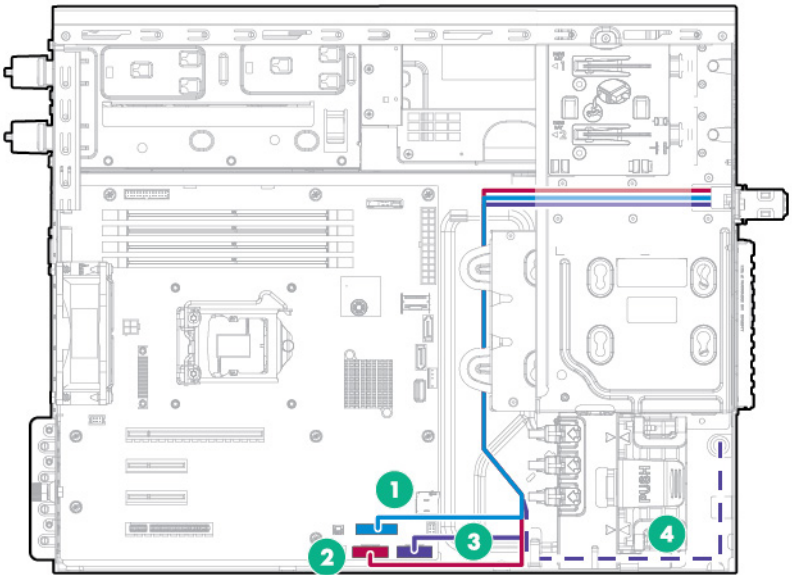

Item	Description
1	Front I/O cable
2	Front USB cable
3	Front USB cable

Item	Description
4	Ambient temperature sensor cable (shared connector with front I/O cable)

FBWC cabling

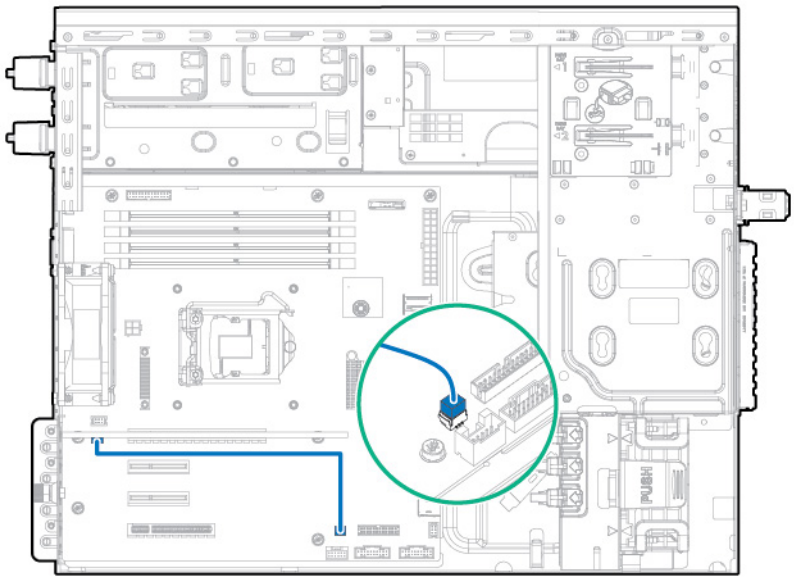

Smart Storage Battery cabling

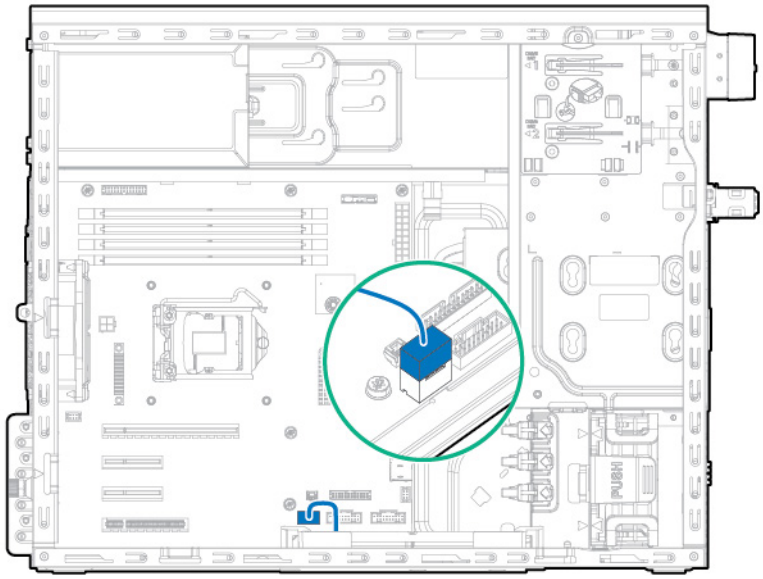

System fan cabling

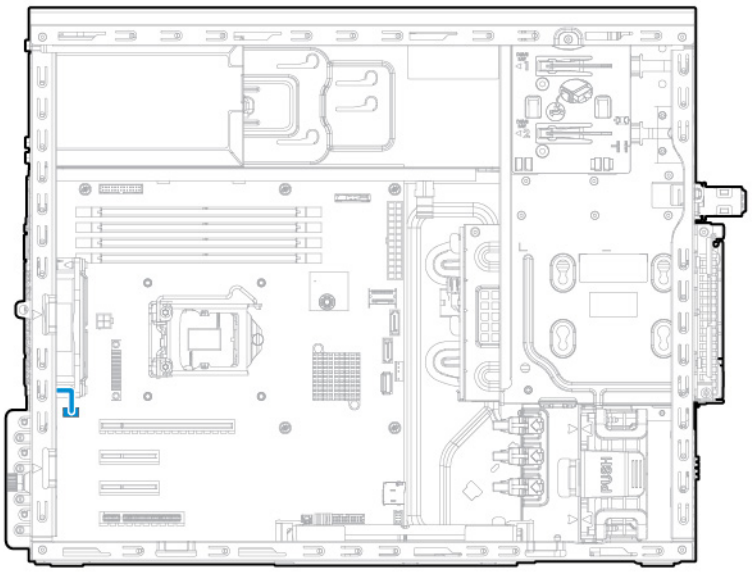

Front PCI fan cabling

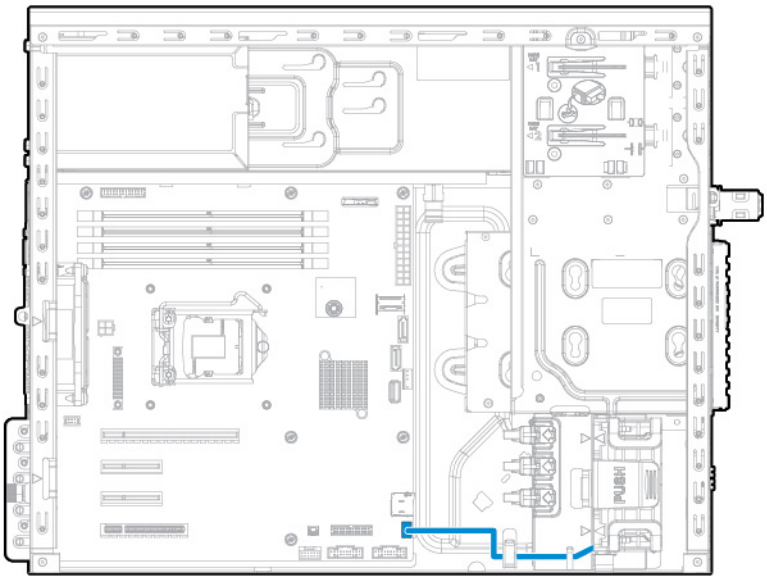

Power supply cabling

350W E1.0/E2.0 non-hot-plug power supply

- Four-bay LFF non-hot-plug drive configuration

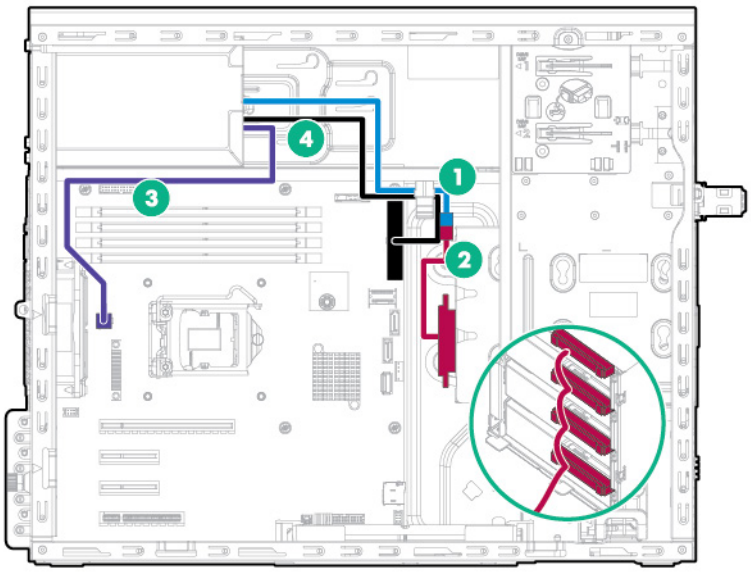

Item	Description
1	8-pin drive power cable
2	Non-hot plug drive power cable
3	4-pin power cable
4	24-pin power cable

- Four-bay LFF hot-plug drive configuration

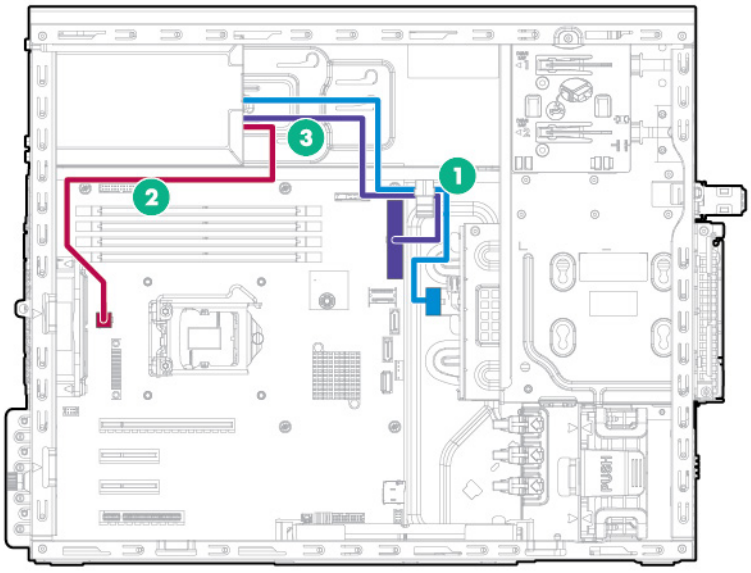

Item	Description
1	8-pin drive power cable

Item	Description
2	4-pin power cable
3	24-pin power cable

- Eight-bay SFF hot-plug drive configuration

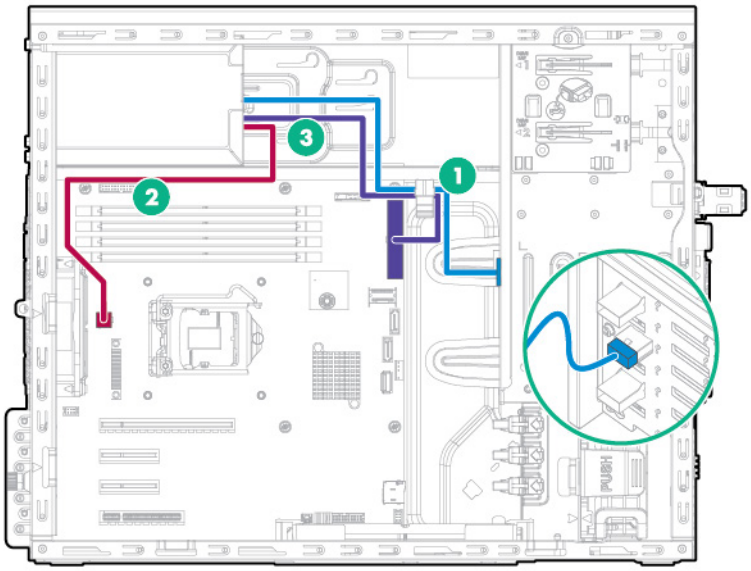

Item	Description
1	8-pin drive power cable
2	4-pin power cable
3	24-pin power cable

Redundant power supply cabling

- Four-bay LFF non-hot-plug drive configuration

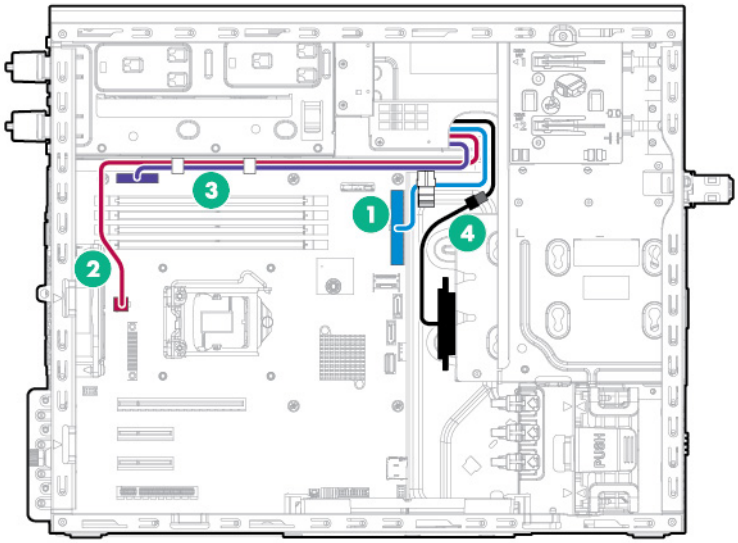

Item	Description
1	24-pin power supply cable
2	4-pin power supply cable
3	RPS sideband signal cable
4	10-pin to 8-pin power supply cable

- Four-bay LFF hot-plug drive configuration

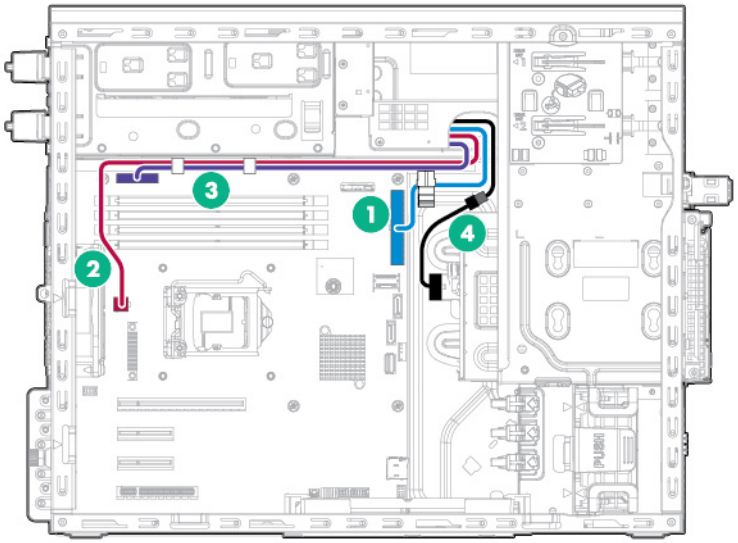

Item	Description
1	24-pin power supply cable
2	4-pin power supply cable
3	RPS sideband signal cable
4	10-pin to 8-pin power supply cable

- Eight-bay SFF hot-plug drive configuration

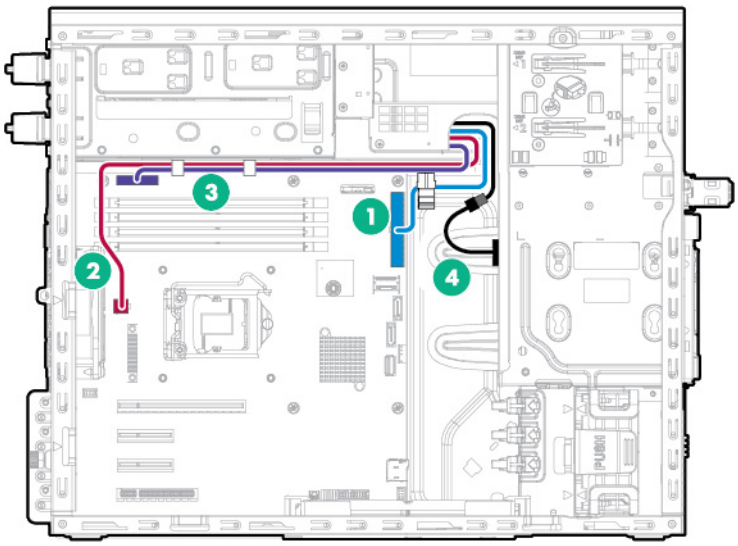

Item	Description
1	24-pin power supply cable
2	4-pin power supply cable
3	RPS sideband signal cable
4	10-pin to 8-pin power supply cable

Software and configuration utilities

Server mode

The software and configuration utilities presented in this section operate in online mode, offline mode, or in both modes.

Software or configuration utility	Server mode
HPE iLO (on page 86)	Online and Offline
Active Health System (on page 86)	Online and Offline
RESTful API support for iLO ("iLO RESTful API support" on page 87)	Online and Offline
Integrated Management Log (on page 87)	Online and Offline
HPE Insight Remote Support (on page 87)	Online
HPE Insight Online ("Insight Online" on page 88)	Online
Intelligent Provisioning (on page 88)	Offline
HPE Insight Diagnostics ("Insight Diagnostics" on page 89)	Online and Offline
Erase Utility (on page 89)	Offline
Scripting Toolkit for Windows and Linux (on page 90)	Online
Service Pack for ProLiant (on page 90)	Online and Offline
HP Smart Update Manager (on page 90)	Online and Offline
HPE UEFI System Utilities ("UEFI System Utilities" on page 90)	Offline
HPE Smart Storage Administrator (on page 94)	Online and Offline
FWUPDATE utility (on page 96)	Offline

Product QuickSpecs

For more information about product features, specifications, options, configurations, and compatibility, see the product QuickSpecs on the Hewlett Packard Enterprise website (**http://www.hpe.com/info/qs**).

HPE iLO

iLO is a remote server management processor embedded on the system boards of HPE ProLiant and Synergy servers. iLO enables the monitoring and controlling of servers from remote locations. HPE iLO management is a powerful tool that provides multiple ways to configure, update, monitor, and repair servers remotely. iLO (Standard) comes preconfigured on HPE servers **without an additional cost or license**.

Features that enhance server administrator productivity are licensed. For more information, see the iLO documentation on the Hewlett Packard Enterprise website (**http://www.hpe.com/info/ilo-docs**).

Active Health System

The Active Health System monitors and records changes in the server hardware and system configuration.

The Active Health System provides:

- Continuous health monitoring of over 1600 system parameters
- Logging of all configuration changes
- Consolidated health and service alerts with precise time stamps
- Agentless monitoring that does not affect application performance

The Agentless Management Service is available in the SPP, which can be downloaded from the Hewlett Packard Enterprise website (**http://www.hpe.com/servers/spp/download**). The Active Health System log can be downloaded manually from iLO 4 or Intelligent Provisioning and sent to Hewlett Packard Enterprise.

For more information, see the following documents:

- *iLO User Guide* on the Hewlett Packard Enterprise website (**http://www.hpe.com/info/ilo/docs**)
- *Intelligent Provisioning User Guide* on the Hewlett Packard Enterprise website (**http://www.hpe.com/info/intelligentprovisioning/docs**)

iLO RESTful API support

HPE iLO 4 firmware version 2.00 and later includes the iLO RESTful API. The iLO RESTful API is a management interface that server management tools can use to perform configuration, inventory, and monitoring of the ProLiant server via iLO. The iLO RESTful API uses basic HTTPS operations (GET, PUT, POST, DELETE, and PATCH) to submit or return JSON-formatted data with iLO web server.

HPE iLO 4 2.30 and later is Redfish 1.0-conformant while remaining backward compatible with the existing iLO RESTful API.

HPE iLO 4 supports the iLO RESTful API with ProLiant Gen8 and later servers. For more information about the iLO RESTful API, see the Hewlett Packard Enterprise website (**http://www.hpe.com/info/restfulinterface/docs**).

Integrated Management Log

The IML records hundreds of events and stores them in an easy-to-view form. The IML timestamps each event with 1-minute granularity.

You can view recorded events in the IML in several ways, including the following:

- From within HPE SIM
- From within the UEFI System Utilities (on page 90)
- From within the Embedded UEFI shell (on page 92)
- From within operating system-specific IML viewers:
  - For Windows: IML Viewer
  - For Linux: IML Viewer Application
- From within the iLO web interface
- From within Insight Diagnostics (on page 89)

HPE Insight Remote Support

Hewlett Packard Enterprise strongly recommends that you register your device for remote support to enable enhanced delivery of your Hewlett Packard Enterprise warranty, HPE support services, or Hewlett Packard Enterprise contractual support agreement. Insight Remote Support supplements your monitoring continuously to ensure maximum system availability by providing intelligent event diagnosis, and

automatic, secure submission of hardware event notifications to Hewlett Packard Enterprise, which will initiate a fast and accurate resolution, based on your product's service level. Notifications can be sent to your authorized Hewlett Packard Enterprise Channel Partner for onsite service, if configured and available in your country.

For more information, see *Insight Remote Support and Insight Online Setup Guide for ProLiant Servers and BladeSystem c-Class Enclosures* on the Hewlett Packard Enterprise website (**http://www.hpe.com/info/insightremotesupport/docs**). Insight Remote Support is available as part of Hewlett Packard Enterprise Warranty, HPE support services, or Hewlett Packard Enterprise contractual support agreement.

HPE Insight Remote Support central connect

When you use the embedded Remote Support functionality with ProLiant Gen8 and later server models and BladeSystem c-Class enclosures, you can register a server or enclosure to communicate to Hewlett Packard Enterprise through an Insight Remote Support centralized Hosting Device in your local environment. All configuration and service event information is routed through the Hosting Device. This information can be viewed by using the local Insight Remote Support user interface or the web-based view in Insight Online.

For more information, see *Insight Remote Support Release Notes* on the Hewlett Packard Enterprise website (**http://www.hpe.com/info/insightremotesupport/docs**).

HPE Insight Online direct connect

When you use the embedded Remote Support functionality with ProLiant Gen8 and later server models and BladeSystem c-Class enclosures, you can register a server or enclosure to communicate directly to Insight Online without the need to set up an Insight Remote Support centralized Hosting Device in your local environment. Insight Online will be your primary interface for remote support information.

For more information, see the product documentation on the Hewlett Packard Enterprise website (**http://www.hpe.com/info/insightremotesupport/docs**).

Insight Online

HPE Insight Online is a capability of the Support Center portal. Combined with Insight Remote Support central connect or Insight Online direct connect, it automatically aggregates device health, asset, and support information with contract and warranty information, and then secures it in a single, personalized dashboard that is viewable from anywhere at any time. The dashboard organizes your IT and service data to help you understand and respond to that information more quickly. With specific authorization from you, an authorized Channel Partner can also view your IT environment remotely using Insight Online.

For more information about using Insight Online, see *Insight Online User's Guide* on the Hewlett Packard Enterprise website (**http://www.hpe.com/info/enterprise/docs**).

Intelligent Provisioning

Intelligent Provisioning is a single-server deployment tool embedded in ProLiant Gen8 and later servers. Intelligent Provisioning simplifies ProLiant server setup and provides a reliable and consistent way to deploy ProLiant server configurations:

- Intelligent Provisioning prepares the system for installing "off-the-shelf" and Hewlett Packard Enterprise branded versions of operating system software and integrates optimized ProLiant server support software.
- Intelligent Provisioning provides installation help for Microsoft Windows, Red Hat and SUSE Linux, and VMware operating systems. For specific OS support, see the *Intelligent Provisioning Release*

Notes on the Hewlett Packard Enterprise website (**http://www.hpe.com/info/intelligentprovisioning/docs**).

- Intelligent Provisioning provides maintenance-related tasks using the Perform Maintenance window.

For more information about Intelligent Provisioning software and recovery media downloads, see the Hewlett Packard Enterprise website (**http://www.hpe.com/servers/intelligentprovisioning**). For consolidated drive and firmware update packages, see the Smart Update: Server Firmware and Driver Updates page on the Hewlett Packard Enterprise website (**http://www.hpe.com/info/SmartUpdate**).

Insight Diagnostics

The Insight Diagnostics is a proactive server management tool, available in both offline and online versions. The tool provides diagnostics and troubleshooting capabilities to assist IT administrators who verify server installations, troubleshoot problems, and perform repair validation.

The Insight Diagnostics Offline Edition performs various in-depth system and component testing while the OS is not running. To run this utility, boot the server using Intelligent Provisioning (on page 88).

The Insight Diagnostics Online Edition is a web-based application that captures system configuration and other related data needed for effective server management. Available in Microsoft Windows and Linux versions, the utility helps to ensure proper system operation.

For more information or to download the utility, see the Hewlett Packard Enterprise website (**http://www.hpe.com/info/InsightDiagnostics**). The Insight Diagnostics Online Edition is also available in the SPP ("Service Pack for ProLiant" on page 90).

Insight Diagnostics survey functionality

Insight Diagnostics (on page 89) provides survey functionality that gathers critical hardware and software information on ProLiant servers.

This functionality supports operating systems that the server supports. For operating systems supported by the server, see the Hewlett Packard Enterprise website (**http://www.hpe.com/info/supportos**).

If a significant change occurs between data-gathering intervals, the survey function marks the previous information and overwrites the survey data files to reflect the latest changes.

Survey functionality is installed with every Intelligent Provisioning-assisted Insight Diagnostics installation, or it can be installed through the SPP ("Service Pack for ProLiant" on page 90).

Erase Utility

△ **CAUTION:** Perform a backup before running the Erase Utility. The utility completes the following:

- Sets the system to its original factory state
- Deletes the current hardware configuration information, including array setup and disk partitioning
- Erases all connected hard drives completely.

Before using this utility, see the instructions in the *Intelligent Provisioning User Guide*.

Use the Erase Utility to erase drives and Active Health System logs, and to reset UEFI System Utilities settings. Run the Erase Utility if you must erase the system for the following reasons:

- You want to install a new operating system on a server with an existing operating system.
- You encounter an error when completing the steps of a factory-installed operating system installation.

To access the Erase Utility, click the Perform Maintenance icon from the Intelligent Provisioning home screen, and then select **Erase**.

For more information about the Erase Utility, see the *Intelligent Provisioning User Guide* on the Hewlett Packard Enterprise website (**http://www.hpe.com/info/intelligentprovisioning/docs**).

Scripting Toolkit for Windows and Linux

The STK for Windows and Linux is a server deployment product that delivers an unattended automated installation for high-volume server deployments. The STK is designed to support ProLiant servers. The toolkit includes a modular set of utilities and important documentation that describes how to apply these tools to build an automated server deployment process.

The STK provides a flexible way to create standard server configuration scripts. These scripts are used to automate many of the manual steps in the server configuration process. This automated server configuration process cuts time from each deployment, making it possible to scale rapid, high-volume server deployments.

For more information or to download the STK, see the Hewlett Packard Enterprise website (**http://www.hpe.com/servers/proliant/stk**).

Service Pack for ProLiant

The SPP is a comprehensive systems software (drivers and firmware) solution delivered as a single package with major server releases. This solution uses HP SUM as the deployment tool and is tested on all supported ProLiant servers including ProLiant Gen8 and later servers.

SPP can be used in an online mode on a Windows or Linux hosted operating system, or in an offline mode where the server is booted to an operating system included on the ISO file so that the server can be updated automatically with no user interaction or updated in interactive mode.

For more information or to download SPP, see one of the following pages on the Hewlett Packard Enterprise website:

- Service Pack for ProLiant download page (**http://www.hpe.com/servers/spp/download**)
- Smart Update: Server Firmware and Driver Updates page (**http://www.hpe.com/info/SmartUpdate**)

HP Smart Update Manager

HP SUM is a product used to install and update firmware, drivers, and systems software on ProLiant servers. The HP SUM provides a GUI and a command-line scriptable interface for deployment of systems software for single or one-to-many ProLiant servers and network-based targets, such as iLOs, OAs, and VC Ethernet and Fibre Channel modules.

For more information about HP SUM, see the product page on the Hewlett Packard Enterprise website (**http://www.hpe.com/servers/hpsum**).

To download HP SUM, see the Hewlett Packard Enterprise website (**http://www.hpe.com/servers/hpsum/download**).

To access the *HP Smart Update Manager User Guide*, see the HP SUM Information Library (**http://www.hpe.com/info/hpsum/documentation**).

UEFI System Utilities

The UEFI System Utilities is embedded in the system ROM. The UEFI System Utilities enable you to perform a wide range of configuration activities, including:

- Configuring system devices and installed options

- Enabling and disabling system features
- Displaying system information
- Selecting the primary boot controller
- Configuring memory options
- Selecting a language
- Launching other preboot environments such as the Embedded UEFI Shell and Intelligent Provisioning

For more information, see the UEFI System Utilities user guide for your product on the Hewlett Packard Enterprise website (**http://www.hpe.com/info/UEFI/docs**).

To access mobile-ready online help for the UEFI System Utilities and UEFI Shell, scan the QR code at the bottom of the screen. For on-screen help, press the **F1** key.

Using UEFI System Utilities

To use the System Utilities, use the following keys.

Action	Key
Access System Utilities	F9 during server POST
Navigate menus	Up and Down arrows
Select items	Enter
Save selections	F10
Access Help for a highlighted configuration option*	F1

*Scan the QR code on the screen to access online help for the UEFI System Utilities and UEFI Shell.

Default configuration settings are applied to the server at one of the following times:

- Upon the first system power-up
- After defaults have been restored

Default configuration settings are sufficient for typical server operations; however, you can modify configuration settings as needed. The system prompts you for access to the UEFI System Utilities each time the system is powered up.

Flexible boot control

This feature enables you to do the following:

- Add Boot Options:
  - Browse all FAT16 and FAT32 file systems.
  - To add a new UEFI boot option, select an X64 UEFI application with an .EFI extension. For example, adding an OS boot loader or other UEFI application as a new UEFI boot option.

    The new boot option is appended to the boot-order list. When you select a file, you are prompted to enter the boot option description. This description, and any optional data to be passed to an .EFI application, is then displayed in the boot menu.
- Boot to System Utilities

  After pre-POST, the boot options screen appears. During this time, you can access the UEFI System Utilities by pressing the **F9** key.
- Choose between supported modes:
  - Legacy BIOS Boot Mode

- UEFI Boot Mode

IMPORTANT: If the default boot mode settings are different than the user-defined settings, the system may not boot the OS installation if the defaults are restored. To avoid this issue, use the User Defined Defaults feature in UEFI System Utilities to override the factory default settings.

For more information, see the UEFI System Utilities user guide for your product on the Hewlett Packard Enterprise website (**http://www.hpe.com/info/UEFI/docs**).

Restoring and customizing configuration settings

You can reset all configuration settings to the factory default settings, or you can restore and use the system default configuration settings.

You can also configure default settings as necessary, and then save the configuration as the custom default configuration. When the system loads the default settings, it uses the custom default settings instead of the factory defaults.

Secure Boot configuration

Secure Boot is integrated in the UEFI specification on which the Hewlett Packard Enterprise implementation of UEFI is based. Secure Boot is implemented in the BIOS and does not require special hardware. Secure Boot ensures that each component launched during the boot process is digitally signed. Secure Boot also ensures that the signature is validated against a set of trusted certificates embedded in the UEFI BIOS. Secure Boot validates the software identity of the following components in the boot process:

- UEFI drivers loaded from PCIe cards
- UEFI drivers loaded from mass storage devices
- Preboot UEFI shell applications
- OS UEFI boot loaders

Once enabled, only firmware components and operating systems with boot loaders that have an appropriate digital signature can execute during the boot process. Only operating systems that support Secure Boot and have an EFI boot loader signed with one of the authorized keys can boot. For more information about supported operating systems, see the UEFI System Utilities and Shell release notes for your server on the Hewlett Packard Enterprise website (**http://www.hpe.com/info/UEFI/docs**).

A physically present user can customize the certificates embedded in the UEFI BIOS by adding or removing their own certificates.

When Secure Boot is enabled, the System Maintenance Switch does not restore all manufacturing defaults when set to the ON position. For security reasons, the following are not restored to defaults when the System Maintenance Switch is in the ON position:

- Secure Boot is not disabled and remains enabled.
- The Boot Mode remains in UEFI Boot Mode even if the default boot mode is Legacy Boot Mode.
- The Secure Boot Database is not restored to its default state.
- iSCSI Software Initiator configuration settings are not restored to defaults.

Embedded UEFI shell

The system BIOS in all ProLiant Gen9 servers includes an Embedded UEFI Shell in the ROM. The UEFI Shell environment provides an API, a command-line prompt, and a set of CLIs that allow scripting, file

manipulation, and system information. These features enhance the capabilities of the UEFI System Utilities.

For more information, see the following documents:

- *UEFI Shell User Guide for HPE ProLiant Gen9 Servers* on the Hewlett Packard Enterprise website (**http://www.hpe.com/info/UEFI/docs**)
- *UEFI Shell Specification* on the UEFI website (**http://www.uefi.org/specifications**)

Embedded Diagnostics option

The system BIOS in all ProLiant Gen9 servers includes an Embedded Diagnostics option in the ROM. The Embedded Diagnostics option can run comprehensive diagnostics of the server hardware, including processors, memory, drives, and other server components.

For more information on the Embedded Diagnostics option, see the UEFI System Utilities user guide for your server on the Hewlett Packard Enterprise website (**http://www.hpe.com/info/UEFI/docs**).

iLO RESTful API support for UEFI

The ProLiant Gen9 servers include support for a UEFI-compliant System BIOS, along with UEFI System Utilities and Embedded UEFI Shell preboot environments. ProLiant Gen9 servers also support configuring the UEFI BIOS settings using the iLO RESTful API, a management interface that server management tools can use to perform configuration, inventory, and monitoring of a ProLiant server. The iLO RESTful API uses basic HTTPS operations (GET, PUT, POST, DELETE, and PATCH) to submit or return JSON-formatted data with iLO web server.

For more information about the iLO RESTful API and the RESTful Interface Tool, see the Hewlett Packard Enterprise website (**http://www.hpe.com/info/restfulinterface/docs**).

Re-entering the server serial number and product ID

After you replace the system board, you must re-enter the server serial number and the product ID:

1. During the server startup sequence, press the **F9** key to access UEFI System Utilities.
2. Select **System Configuration** > **BIOS/Platform Configuration (RBSU)** > **Advanced Options** > **Advanced System ROM Options** > **Serial Number**, and then press the **Enter** key.
3. Enter the serial number and press the **Enter** key.

   The following message appears:

   ```
   The serial number should only be modified by qualified service personnel.
   This value should always match the serial number located on the chassis.
   ```
4. To clear the warning, press the **Enter** key.
5. Enter the serial number and press the **Enter** key.
6. Select **Product ID**.

   The following warning appears:

   ```
   Warning: The Product ID should ONLY be modified by qualified service
   personnel. This value should always match the Product ID located on the
   chassis.
   ```
7. Enter the product ID and press the **Enter** key.
8. To confirm exiting System Utilities, press the **F10** key.

   The server automatically reboots.

Utilities and features

HPE Smart Storage Administrator

The HPE SSA is a configuration and management tool for HPE Smart Array controllers. Starting with HPE ProLiant Gen8 servers, HPE SSA replaces ACU with an enhanced GUI and additional configuration features.

The HPE SSA exists in three interface formats: the HPE SSA GUI, the HPE SSA CLI, and HPE SSA Scripting. Although all formats provide support for configuration tasks, some of the advanced tasks are available in only one format.

Some HPE SSA features include the following:

- Supports online array capacity expansion, logical drive extension, assignment of online spares, and RAID or stripe size migration
- Provides diagnostic and SmartSSD Wear Gauge functionality on the Diagnostics tab
- For supported controllers, provides access to additional features.

For more information about HPE SSA, see the Hewlett Packard Enterprise website (**http://www.hpe.com/servers/ssa**).

Automatic Server Recovery

ASR is a feature that causes the system to restart when a catastrophic operating system error occurs, such as a blue screen, ABEND, or panic. A system fail-safe timer, the ASR timer, starts when the System Management driver, also known as the Health Driver, is loaded. When the operating system is functioning properly, the system periodically resets the timer. However, when the operating system fails, the timer expires and restarts the server.

ASR increases server availability by restarting the server within a specified time after a system hang. You can disable ASR from the System Management Homepage or through UEFI System Utilities.

USB support

Hewlett Packard Enterprise servers support both USB 2.0 ports and USB 3.0 ports. Both port types support installing all types of USB devices (USB 1.0, USB 2.0, and USB 3.0), but might run at lower speeds in specific situations:

- USB 3.0 capable devices operate at USB 2.0 speeds when installed in a USB 2.0 port.
- In UEFI Boot Mode, Hewlett Packard Enterprise provides legacy USB support in the preboot environment before the operating system loading for USB 1.0, USB 2.0, and USB 3.0 speeds.
- In Legacy BIOS Boot Mode, Hewlett Packard Enterprise provides legacy USB support in the preboot environment before the operating system loading for USB 1.0 and USB 2.0 speeds. USB 3.0 ports can be used with all devices in Legacy BIOS Boot Mode but are not available at USB 3.0 speeds in the preboot environment. Standard USB support (USB support from within the operating system) is provided by the OS through the appropriate USB device drivers. Support for USB 3.0 varies by operating system.

For maximum compatibility of USB 3.0 devices with all operating systems, Hewlett Packard Enterprise provides a configuration setting for USB 3.0 Mode. Auto is the default setting. This setting impacts USB 3.0 devices when connected to USB 3.0 ports in the following manner:

- **Auto (default)**—If configured in Auto Mode, USB 3.0 capable devices operate at USB 2.0 speeds in the preboot environment and during boot. When a USB 3.0 capable OS USB driver loads, USB 3.0 devices transition to USB 3.0 speeds. This mode is compatible with operating systems that do not

support USB 3.0 while allowing USB 3.0 devices to operate at USB 3.0 speeds with state-of-the-art operating systems.

- **Enabled**—If Enabled, USB 3.0 capable devices operate at USB 3.0 speeds at all times (including the preboot environment) when in UEFI Boot Mode. Do not use this mode with operating systems that do not support USB 3.0. If operating in Legacy Boot BIOS Mode, the USB 3.0 ports cannot function in the preboot environment and are not bootable.
- **Disabled**—If configured for Disabled, USB 3.0 capable devices function at USB 2.0 speeds at all times.

The pre-OS behavior and default operation of the USB ports is configurable in the UEFI System Utilities. For more information, see the UEFI System Utilities user guide for your product on the Hewlett Packard Enterprise website (**http://www.hpe.com/info/UEFI/docs**).

External USB functionality

Hewlett Packard Enterprise provides external USB support to enable local connection of USB devices for server administration, configuration, and diagnostic procedures.

For additional security, external USB functionality can be disabled through USB options in UEFI System Utilities.

Redundant ROM support

The server enables you to upgrade or configure the ROM safely with redundant ROM support. The server has a single ROM that acts as two separate ROM images. In the standard implementation, one side of the ROM contains the current ROM program version, while the other side of the ROM contains a backup version.

NOTE: The server ships with the same version programmed on each side of the ROM.

Safety and security benefits

When you flash the system ROM, ROMPaq writes over the backup ROM and saves the current ROM as a backup, enabling you to switch easily to the alternate ROM version if the new ROM becomes corrupted for any reason. This feature protects the existing ROM version, even if you experience a power failure while flashing the ROM.

Keeping the system current

Access to Hewlett Packard Enterprise Support Materials

Access to some updates for ProLiant Servers may require product entitlement when accessed through the Hewlett Packard Enterprise Support Center support portal. Hewlett Packard Enterprise recommends that you have an HP Passport set up with relevant entitlements. For more information, see the Hewlett Packard Enterprise website (**http://www.hpe.com/support/AccessToSupportMaterials**).

Updating firmware or System ROM

Multiple methods exist to update the firmware or System ROM:

- Service Pack for ProLiant (on page 90)
- FWUPDATE utility (on page 96)
- FWUpdate command from within the Embedded UEFI shell (on page 96)

- Firmware Update application in UEFI System Utilities ("Firmware Update application in the UEFI System Utilities" on page 97)
- Online Flash components (on page 97)

Product entitlement is required to perform updates. For more information, see "Accessing updates."

FWUPDATE utility

The FWUPDATE utility enables you to upgrade the system firmware (BIOS).

To use the utility to upgrade the firmware:

1. Download the FWUPDATE flash component from the Hewlett Packard Enterprise Support Center website (**http://www.hpe.com/support/hpesc**).
2. Save the FWUPDATE flash components to a USB key.
3. Set the boot order so that the USB key will boot first using one of the following options:
   - Configure the boot order so that the USB key is the first bootable device.
   - Press the **F11** key (Boot Menu) when prompted during system boot to access the **One-Time Boot Menu**. This menu allows you to select the boot device for a specific boot and does not modify the boot order configuration settings.
4. Insert the USB key into an available USB port.
5. Boot the system.

   The FWUPDATE utility checks the system and provides a choice (if more than one exists) of available firmware revisions.

To download the flash components, see the Hewlett Packard Enterprise Support Center website (**http://www.hpe.com/support/hpesc**).

For more information about One-Time Boot Menu, see the UEFI System Utilities user guide for your product on the Hewlett Packard Enterprise website (**http://www.hpe.com/info/UEFI/docs**).

FWUpdate command from within the Embedded UEFI Shell

For systems configured in either boot mode, update the firmware:

1. Access the System ROM Flash Binary component for your server from the Hewlett Packard Enterprise Support Center website (**http://www.hpe.com/support/hpesc**). When searching for the component, always select **OS Independent** to locate the binary file.
2. Copy the binary file to a USB media or iLO virtual media.
3. Attach the media to the server.
4. Boot to Embedded Shell.
5. To obtain the assigned file system volume for the USB key, enter the `Map –r` command.

   For more information about accessing a file system from the shell, see the *UEFI Shell User Guide for HPE ProLiant Gen9 Servers* on the Hewlett Packard Enterprise website (**http://www.hpe.com/info/UEFI/docs**).
6. Change to the file system that contains the System ROM Flash Binary component for your server. Enter one of the `fsx` file systems available, such as `fs0` or `fs1`, and press the **Enter** key.
7. Use the `cd` command to change from the current directory to the directory that contains the binary file.
8. Enter the `fwupdate –d BIOS –f <filename>` command to flash the system ROM.

   For help on the FWUPDATE command, enter the following command:

   ```
   help fwupdate -b
   ```
9. Reboot the server.

A reboot is required after the firmware update for the updates to take effect, and for hardware stability to be maintained.

For more information about the commands used in this procedure, see the *UEFI Shell User Guide for HPE ProLiant Gen9 Servers* on the Hewlett Packard Enterprise website (**http://www.hpe.com/info/UEFI/docs**).

Firmware Update application in the UEFI System Utilities

For systems configured in either boot mode, update the firmware:

1. Access the System ROM Flash Binary component for your server from the Hewlett Packard Enterprise Support Center website (**http://www.hpe.com/support/hpesc**). When searching for the component, always select **Cross operating system** to locate the binary file.
2. Copy the binary file to a USB media or iLO virtual media.
3. Attach the media to the server.
4. During POST, press **F9** to enter System Utilities.
5. Select **Embedded Applications** → **Firmware Update** → **System ROM** → **Select Firmware File**.
6. Select the device containing the flash file.
7. Select the flash file. This step may take a few moments to complete.
8. Select **Start firmware update** and allow the process to complete.
9. Reboot the server. A reboot is required after the firmware update for the updates to take effect and for hardware stability to be maintained.

Online Flash components

This component provides updated system firmware that can be installed directly on supported operating systems. Additionally, when used in conjunction with SUM ("HP Smart Update Manager" on page 90), this Smart Component allows the user to update firmware on remote servers from a central location. This remote deployment capability eliminates the need for the user to be physically present at the server to perform a firmware update.

Drivers

IMPORTANT: Always perform a backup before installing or updating device drivers.

The server includes new hardware that may not have driver support on all OS installation media.

If you are installing an Intelligent Provisioning-supported OS, use Intelligent Provisioning (on page 88) and its Configure and Install feature to install the OS and latest supported drivers.

If you do not use Intelligent Provisioning to install an OS, drivers for some of the new hardware are required. These drivers, as well as other option drivers, ROM images, and value-add software can be downloaded as part of an SPP.

If you are installing drivers from SPP, be sure that you are using the latest SPP version that your server supports. To verify that your server is using the latest supported version and for more information about SPP, see the Hewlett Packard Enterprise website (**http://www.hpe.com/servers/spp/download**).

To locate the drivers for a particular server, go to the Hewlett Packard Enterprise Support Center website (**http://www.hpe.com/support/hpesc**). Under **Select your HPE product**, enter the product name or number and click **Go**.

Software and firmware

Update software and firmware before using the server for the first time, unless any installed software or components require an older version.

For system software and firmware updates, use one of the following sources:

- Download the SPP ("Service Pack for ProLiant" on page 90) from the Hewlett Packard Enterprise website (**http://www.hpe.com/servers/spp/download**).
- Download individual drivers, firmware, or other systems software components from the server product page in the Hewlett Packard Enterprise Support Center website (**http://www.hpe.com/support/hpesc**).

Operating System Version Support

For information about specific versions of a supported operating system, refer to the operating system support matrix (**http://www.hpe.com/info/ossupport**).

Version control

The VCRM and VCA are web-enabled Insight Management Agents tools that SIM uses to schedule software update tasks to the entire enterprise.

- VCRM manages the repository for SPP. Administrators can do the following:
  - View the SPP contents
  - Configure VCRM to update the repository automatically with internet downloads of the latest software and firmware from Hewlett Packard Enterprise
- VCA compares installed software versions on the node with updates available in the VCRM managed repository. Administrators configure VCA to point to a repository managed by VCRM.

For more information about version control tools, see the following documents on the Hewlett Packard Enterprise website (**http://www.hpe.com/info/enterprise/docs**):

- *Systems Insight Manager User Guide*
- *Version Control Agent User Guide*
- *Version Control Repository Manager User Guide*

To locate the documents, do the following:

1. Select **Insight Management** from the available options in Products and Solutions.
2. Select **Version Control** from the available options in Models / Subcategories.
3. Locate and download the latest document.

Operating systems and virtualization software support for ProLiant servers

For information about specific versions of a supported operating system, see the Hewlett Packard Enterprise website (**http://www.hpe.com/info/ossupport**).

HPE Technology Service Portfolio

HPE Technology Services deliver confidence, reduces risk and helps customers realize agility and stability. We help customers succeed through Hybrid IT by simplifying and enriching the on-premise experience, informed by public cloud qualities and attributes. HPE Support Services enables you to choose the right service level, length of coverage and response time to fit your business needs. Connect

to HPE to help prevent problems and solve issues faster. By connecting, you will receive 24x7 monitoring, prefailure alerts, automatic call logging, and automatic parts dispatch. To learn more about getting connected, see the Hewlett Packard Enterprise website (**http://www.hpe.com/services/getconnected**).

For more information about support services, see the Hewlett Packard Enterprise website (**http://www.hpe.com/services/support**).

Utilize our consulting expertise in the following areas:

- Private or hybrid cloud computing
- Big data and mobility requirements
- Improving data center infrastructure
- Better use of server, storage, and networking technology

For more information, see the Hewlett Packard Enterprise website (**http://www.hpe.com/services/consulting**).

Change control and proactive notification

Hewlett Packard Enterprise offers Change Control and Proactive Notification to notify customers 30 to 60 days in advance of the following:

- Upcoming hardware and software changes
- Bulletins
- Patches

Let us know what Hewlett Packard Enterprise commercial products you own and we will send you the latest updates to keep your business running smoothly.

For more information, see the Hewlett Packard Enterprise website (**http://www.hpe.com/info/pcn**).

Troubleshooting

Troubleshooting resources

The *HPE ProLiant Gen9 Troubleshooting Guide, Volume I: Troubleshooting* provides procedures for resolving common problems and comprehensive courses of action for fault isolation and identification, issue resolution, and software maintenance on ProLiant servers and server blades. To view the guide, select a language:

- English (**http://www.hpe.com/support/Gen9_TSG_en**)
- French (**http://www.hpe.com/support/Gen9_TSG_fr**)
- Spanish (**http://www.hpe.com/support/Gen9_TSG_es**)
- German (**http://www.hpe.com/support/Gen9_TSG_de**)
- Japanese (**http://www.hpe.com/support/Gen9_TSG_ja**)
- Simplified Chinese (**http://www.hpe.com/support/Gen9_TSG_zh_cn**)

The *HPE ProLiant Gen9 Troubleshooting Guide, Volume II: Error Messages* provides a list of error messages and information to assist with interpreting and resolving error messages on ProLiant servers and server blades. To view the guide, select a language:

- English (**http://www.hpe.com/support/Gen9_EMG_en**)
- French (**http://www.hpe.com/support/Gen9_EMG_fr**)
- Spanish (**http://www.hpe.com/support/Gen9_EMG_es**)
- German (**http://www.hpe.com/support/Gen9_EMG_de**)
- Japanese (**http://www.hpe.com/support/Gen9_EMG_ja**)
- Simplified Chinese (**http://www.hpe.com/support/Gen9_EMG_zh_cn**)

System battery replacement

If the server no longer automatically displays the correct date and time, then replace the battery that provides power to the real-time clock. Under normal use, battery life is 5 to 10 years.

⚠ **WARNING:** The computer contains an internal lithium manganese dioxide, a vanadium pentoxide, or an alkaline battery pack. A risk of fire and burns exists if the battery pack is not properly handled. To reduce the risk of personal injury:

- Do not attempt to recharge the battery.
- Do not expose the battery to temperatures higher than 60°C (140°F).
- Do not disassemble, crush, puncture, short external contacts, or dispose of in fire or water.
- Replace only with the spare designated for this product.

To remove the component:

1. Power down the server (on page 16).
2. Remove all power:
   a. Disconnect each power cord from the power source.
   b. Disconnect each power cord from the server.
3. Do the following:
   a. Unlock the tower bezel ("Remove the bezel" on page 17).
   b. Remove the tower bezel ("Remove the bezel" on page 17).
4. Place the server on its side with the access panel facing up.
5. Remove the access panel (on page 19).
6. Remove the air baffle (on page 20).
7. Locate the battery on the system board ("System board components" on page 10).
8. Remove the battery.

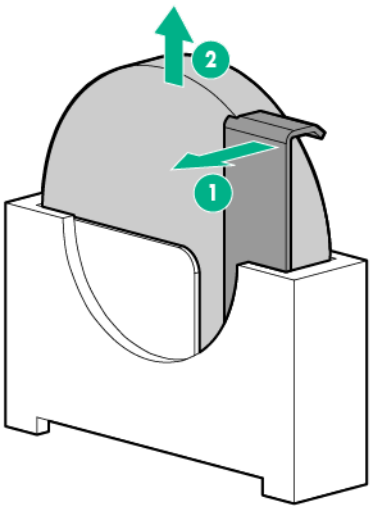

⚠ **IMPORTANT:** Replacing the system board battery resets the system ROM to its default configuration. After replacing the battery, use BIOS/Platform Configuration (RBSU) in the UEFI System Utilities (on page 90) to reconfigure the system.

To replace the component, reverse the removal procedure.

For more information about battery replacement or proper disposal, contact an authorized reseller or an authorized service provider.

Warranty and regulatory information

Warranty information

HPE ProLiant and x86 Servers and Options (**http://www.hpe.com/support/ProLiantServers-Warranties**)

HPE Enterprise Servers (**http://www.hpe.com/support/EnterpriseServers-Warranties**)

HPE Storage Products (**http://www.hpe.com/support/Storage-Warranties**)

HPE Networking Products (**http://www.hpe.com/support/Networking-Warranties**)

Regulatory information

Safety and regulatory compliance

For important safety, environmental, and regulatory information, see *Safety and Compliance Information for Server, Storage, Power, Networking, and Rack Products*, available at the Hewlett Packard Enterprise website (**http://www.hpe.com/support/Safety-Compliance-EnterpriseProducts**).

Belarus Kazakhstan Russia marking

Manufacturer and Local Representative Information

Manufacturer information:

Hewlett Packard Enterprise Company, 3000 Hanover Street, Palo Alto, CA 94304 U.S.

Local representative information Russian:

- **Russia:**

  ООО «Хьюлетт Паккард Энтерпрайз», Российская Федерация, 125171, г. Москва, Ленинградское шоссе, 16А, стр.3, Телефон/факс: +7 495 797 35 00

- **Belarus:**

  ИООО «Хьюлетт-Паккард Бел», Республика Беларусь, 220030, г. Минск, ул. Интернациональная, 36-1, Телефон/факс: +375 17 392 28 18

- **Kazakhstan:**

  ТОО «Хьюлетт-Паккард (К)», Республика Казахстан, 050040, г. Алматы, Бостандыкский район, проспект Аль-Фараби, 77/7, Телефон/факс: + 7 727 355 35 50

Local representative information Kazakh:

- **Russia:**

  ЖШС "Хьюлетт Паккард Энтерпрайз" Ресей Федерациясы, 125171,
  Мәскеу, Ленинград тас жолы, 16А блок 3, Телефон/факс: +7 495 797 35 00

- **Belarus:**

  «HEWLETT-PACKARD Bel» ЖШС, Беларусь Республикасы, 220030, Минск қ.,
  Интернациональная көшесі, 36/1, Телефон/факс: +375 17 392 28 18

- **Kazakhstan:**

  ЖШС «Хьюлетт-Паккард (К)», Қазақстан Республикасы, 050040, Алматы к.,
  Бостандық ауданы, Әл-Фараби даңғ ылы, 77/7, Телефон/факс: +7 727 355 35 50

Manufacturing date:

The manufacturing date is defined by the serial number.

CCSYWWZZZZ (serial number format for this product)

Valid date formats include:

- YWW, where Y indicates the year counting from within each new decade, with 2000 as the starting point; for example, 238: 2 for 2002 and 38 for the week of September 9. In addition, 2010 is indicated by 0, 2011 by 1, 2012 by 2, 2013 by 3, and so forth.
- YYWW, where YY indicates the year, using a base year of 2000; for example, 0238: 02 for 2002 and 38 for the week of September 9.

Turkey RoHS material content declaration

Türkiye Cumhuriyeti: EEE Yönetmeliğine Uygundur

Ukraine RoHS material content declaration

Обладнання відповідає вимогам Технічного регламенту щодо обмеження використання деяких небезпечних речовин в електричному та електронному обладнанні, затвердженого постановою Кабінету Міністрів України від 3 грудня 2008 № 1057

Specifications

Environmental specifications

Specification	Value
Temperature range*	
Operating	0° C to 40° C (32° F to 104° F)
Nonoperating	-30° C to 65° C (-22° F to 149° F)
Relative humidity (noncondensing)	
Operating, maximum wet bulb temperature of 28°C (82.4°F)	10% to 90%
Nonoperating, maximum wet bulb temperature of 38.7°C (101.7°F)	0% to 95%

* All temperature ratings shown are for sea level. An altitude derating of 1° C per 304.8 m (1.8° F per 1,000 ft) to 3048 m (10,000 ft) is applicable. No direct sunlight allowed.

Server specifications

Specification	Tower model
Height	36.83 cm (14.50 in)
Depth	47.50 cm (18.70 in)
Width	17.50 cm (6.89 in)
Weight (full load, approximate values)	—
Four-bay LFF non-hot-plug drive model	13.1 kg (28.82 lb)
Four-bay LFF hot-plug drive model	13.6 kg (29.92 lb)
Eight-bay SFF hot-plug drive model	12.4 kg (27.28 lb)

Power supply specifications

Depending on installed options, the server is configured with one of the following power supplies:

- HPE 350 W Power Supply (E-star 1.0)
- HPE 350 W Power Supply (E-star 2.0)
- HPE 460 W CS Gold Hot-plug Power Supply (92% efficiency)

  This power input module is only supported when the two-bay RPS assembly option is installed.

△ **CAUTION:** Check the system and power supply input ratings before powering up the server.

For detailed power supply specifications, see the QuickSpecs on the Hewlett Packard Enterprise website (**http://www.hpe.com/info/proliant/powersupply**).

HPE 350 W Power Supply (E-star 1.0)

Specification	Value
Input requirements	—
Rated input voltage	100 V AC to 240 V AC
Rated input frequency	47 Hz to 63 Hz
Rated input current	6 A to 3 A
Rated input power	427 W at 115 V AC input 427 W at 240 V AC input
Efficiency	No less than 82% at 100% load No less than 85% at 50% load No less than 82% at 20% load
Power supply output	—
Rated steady-state power	350 W at 115 V AC input 350 W at 230 V AC input
Maximum peak power	350 W at 115 V AC input 350 W at 230 V AC input
Rated output power	350 W

HPE 350 W Power Supply (E-star 2.0)

Specification	Value
Input requirements	—
Rated input voltage	100 V AC to 240 V AC
Rated input frequency	47 Hz to 63 Hz
Rated input current	5 A to 2.5 A
Rated input power	412 W at 115 V AC input 412 W at 230 V AC input
Efficiency	No less than 85% at 100% load No less than 88% at 50% load No less than 85% at 20% load
Power supply output	—
Rated steady-state power	350 W at 115 V AC input 350 W at 230 V AC input
Maximum peak power	350 W at 115 V AC input 350 W at 230 V AC input
Rated output power	350 W

HPE 460 W CS Gold Hot-plug Power Supply

Specification	Value
Input requirements	—
Rated input voltage	100 V AC to 240 V AC
Rated input frequency	50 Hz to 60 Hz
Rated input current	6 A to 3 A
Rated input power	526 W at 115 V AC input 523 W at 230 V AC input
Efficiency	No less than 87.5% at 100% load No less than 89.5% at 50% load No less than 87.5% at 20% load

Power supply output	—
Rated steady-state power	460 W at 100 V to 120 V AC input 460 W at 200 V to 240 V AC input
Maximum peak power	460 W at 100 V to 120 V AC input 460 W at 200 V to 240 V AC input
Rated output power	460 W

Support and other resources

Accessing updates

- Some software products provide a mechanism for accessing software updates through the product interface. Review your product documentation to identify the recommended software update method.
- To download product updates, go to either of the following:
  - Hewlett Packard Enterprise Support Center Get connected with updates page (**http://www.hpe.com/support/e-updates**)
  - Software Depot website (**http://www.hpe.com/support/softwaredepot**)
- To view and update your entitlements, and to link your contracts and warranties with your profile, go to the Hewlett Packard Enterprise Support Center More Information on Access to Support Materials page (**http://www.hpe.com/support/AccessToSupportMaterials**).

IMPORTANT: Access to some updates might require product entitlement when accessed through the Hewlett Packard Enterprise Support Center. You must have an HP Passport set up with relevant entitlements.

Websites

- Hewlett Packard Enterprise Information Library (**http://www.hpe.com/info/enterprise/docs**)
- Hewlett Packard Enterprise Support Center (**http://www.hpe.com/support/hpesc**)
- Contact Hewlett Packard Enterprise Worldwide (**http://www.hpe.com/assistance**)
- Subscription Service/Support Alerts (**http://www.hpe.com/support/e-updates**)
- Software Depot (**http://www.hpe.com/support/softwaredepot**)
- Customer Self Repair (**http://www.hpe.com/support/selfrepair**)
- Insight Remote Support (**http://www.hpe.com/info/insightremotesupport/docs**)
- Serviceguard Solutions for HP-UX (**http://www.hpe.com/info/hpux-serviceguard-docs**)
- Single Point of Connectivity Knowledge (SPOCK) Storage compatibility matrix (**http://www.hpe.com/storage/spock**)
- Storage white papers and analyst reports (**http://www.hpe.com/storage/whitepapers**)

Customer Self Repair

Hewlett Packard Enterprise products are designed with many Customer Self Repair (CSR) parts to minimize repair time and allow for greater flexibility in performing defective parts replacement. If during the diagnosis period Hewlett Packard Enterprise (or Hewlett Packard Enterprise service providers or service partners) identifies that the repair can be accomplished by the use of a CSR part, Hewlett Packard Enterprise will ship that part directly to you for replacement. There are two categories of CSR parts:

- **Mandatory**—Parts for which customer self repair is mandatory. If you request Hewlett Packard Enterprise to replace these parts, you will be charged for the travel and labor costs of this service.

- **Optional**—Parts for which customer self repair is optional. These parts are also designed for customer self repair. If, however, you require that Hewlett Packard Enterprise replace them for you, there may or may not be additional charges, depending on the type of warranty service designated for your product.

NOTE: Some Hewlett Packard Enterprise parts are not designed for customer self repair. In order to satisfy the customer warranty, Hewlett Packard Enterprise requires that an authorized service provider replace the part. These parts are identified as "No" in the Illustrated Parts Catalog.

Based on availability and where geography permits, CSR parts will be shipped for next business day delivery. Same day or four-hour delivery may be offered at an additional charge where geography permits. If assistance is required, you can call the Hewlett Packard Enterprise Support Center and a technician will help you over the telephone. Hewlett Packard Enterprise specifies in the materials shipped with a replacement CSR part whether a defective part must be returned to Hewlett Packard Enterprise. In cases where it is required to return the defective part to Hewlett Packard Enterprise, you must ship the defective part back to Hewlett Packard Enterprise within a defined period of time, normally five (5) business days. The defective part must be returned with the associated documentation in the provided shipping material. Failure to return the defective part may result in Hewlett Packard Enterprise billing you for the replacement. With a customer self repair, Hewlett Packard Enterprise will pay all shipping and part return costs and determine the courier/carrier to be used.

For more information about the Hewlett Packard Enterprise CSR program, contact your local service provider. For the North American program, go to the Hewlett Packard Enterprise CSR website (**http://www.hpe.com/support/selfrepair**).

Réparation par le client (CSR)

Les produits Hewlett Packard Enterprise comportent de nombreuses pièces CSR (Customer Self Repair = réparation par le client) afin de minimiser les délais de réparation et faciliter le remplacement des pièces défectueuses. Si pendant la période de diagnostic, Hewlett Packard Enterprise (ou ses partenaires ou mainteneurs agréés) détermine que la réparation peut être effectuée à l'aide d'une pièce CSR, Hewlett Packard Enterprise vous l'envoie directement. Il existe deux catégories de pièces CSR :

- **Obligatoire—**Pièces pour lesquelles la réparation par le client est obligatoire. Si vous demandez à Hewlett Packard Enterprise de remplacer ces pièces, les coûts de déplacement et main d'œuvre du service vous seront facturés.
- **Facultatif**—Pièces pour lesquelles la réparation par le client est facultative. Ces pièces sont également conçues pour permettre au client d'effectuer lui-même la réparation. Toutefois, si vous demandez à Hewlett Packard Enterprise de remplacer ces pièces, l'intervention peut ou non vous être facturée, selon le type de garantie applicable à votre produit.

REMARQUE: Certaines pièces Hewlett Packard Enterprise ne sont pas conçues pour permettre au client d'effectuer lui-même la réparation. Pour que la garantie puisse s'appliquer, Hewlett Packard Enterprise exige que le remplacement de la pièce soit effectué par un Mainteneur Agréé. Ces pièces sont identifiées par la mention "Non" dans le Catalogue illustré.

Les pièces CSR sont livrées le jour ouvré suivant, dans la limite des stocks disponibles et selon votre situation géographique. Si votre situation géographique le permet et que vous demandez une livraison le jour même ou dans les 4 heures, celle-ci vous sera facturée. Pour toute assistance, appelez le Centre d’assistance Hewlett Packard Enterprise pour qu’un technicien vous aide au téléphone. Dans les documents envoyés avec la pièce de rechange CSR, Hewlett Packard Enterprise précise s'il est nécessaire de lui retourner la pièce défectueuse. Si c'est le cas, vous devez le faire dans le délai indiqué, généralement cinq (5) jours ouvrés. La pièce et sa documentation doivent être retournées dans l'emballage fourni. Si vous ne retournez pas la pièce défectueuse, Hewlett Packard Enterprise se réserve le droit de vous facturer les coûts de remplacement. Dans le cas d'une pièce CSR, Hewlett Packard Enterprise supporte l'ensemble des frais d'expédition et de retour, et détermine la société de courses ou le transporteur à utiliser.

Pour plus d'informations sur le programme CSR de Hewlett Packard Enterprise, contactez votre Mainteneur Agrée local. Pour plus d'informations sur ce programme en Amérique du Nord, consultez le site Web Hewlett Packard Enterprise (**http://www.hpe.com/support/selfrepair**).

Riparazione da parte del cliente

Per abbreviare i tempi di riparazione e garantire una maggiore flessibilità nella sostituzione di parti difettose, i prodotti Hewlett Packard Enterprise sono realizzati con numerosi componenti che possono essere riparati direttamente dal cliente (CSR, Customer Self Repair). Se in fase di diagnostica Hewlett Packard Enterprise (o un centro di servizi o di assistenza Hewlett Packard Enterprise) identifica il guasto come riparabile mediante un ricambio CSR, Hewlett Packard Enterprise lo spedirà direttamente al cliente per la sostituzione. Vi sono due categorie di parti CSR:

- **Obbligatorie—**Parti che devono essere necessariamente riparate dal cliente. Se il cliente ne affida la riparazione ad Hewlett Packard Enterprise, deve sostenere le spese di spedizione e di manodopera per il servizio.
- **Opzionali—**Parti la cui riparazione da parte del cliente è facoltativa. Si tratta comunque di componenti progettati per questo scopo. Se tuttavia il cliente ne richiede la sostituzione ad Hewlett Packard Enterprise, potrebbe dover sostenere spese addizionali a seconda del tipo di garanzia previsto per il prodotto.

NOTA: alcuni componenti Hewlett Packard Enterprise non sono progettati per la riparazione da parte del cliente. Per rispettare la garanzia, Hewlett Packard Enterprise richiede che queste parti siano sostituite da un centro di assistenza autorizzato. Tali parti sono identificate da un "No" nel Catalogo illustrato dei componenti.

In base alla disponibilità e alla località geografica, le parti CSR vengono spedite con consegna entro il giorno lavorativo seguente. La consegna nel giorno stesso o entro quattro ore è offerta con un supplemento di costo solo in alcune zone. In caso di necessità si può richiedere l'assistenza telefonica di un addetto del centro di supporto tecnico Hewlett Packard Enterprise. Nel materiale fornito con una parte di ricambio CSR, Hewlett Packard Enterprise specifica se il cliente deve restituire dei component. Qualora sia richiesta la resa ad Hewlett Packard Enterprise del componente difettoso, lo si deve spedire ad Hewlett Packard Enterprise entro un determinato periodo di tempo, generalmente cinque (5) giorni lavorativi. Il componente difettoso deve essere restituito con la documentazione associata nell'imballo di spedizione fornito. La mancata restituzione del componente può comportare la fatturazione del ricambio da parte di Hewlett Packard Enterprise. Nel caso di riparazione da parte del cliente, Hewlett Packard Enterprise sostiene tutte le spese di spedizione e resa e sceglie il corriere/vettore da utilizzare.

Per ulteriori informazioni sul programma CSR di Hewlett Packard Enterprise, contattare il centro di assistenza di zona. Per il programma in Nord America fare riferimento al sito Web (**http://www.hpe.com/support/selfrepair**).

Customer Self Repair

Hewlett Packard Enterprise Produkte enthalten viele CSR-Teile (Customer Self Repair), um Reparaturzeiten zu minimieren und höhere Flexibilität beim Austausch defekter Bauteile zu ermöglichen. Wenn Hewlett Packard Enterprise (oder ein Hewlett Packard Enterprise Servicepartner) bei der Diagnose feststellt, dass das Produkt mithilfe eines CSR-Teils repariert werden kann, sendet Ihnen Hewlett Packard Enterprise dieses Bauteil zum Austausch direkt zu. CSR-Teile werden in zwei Kategorien unterteilt:

- **Zwingend—**Teile, für die das Customer Self Repair-Verfahren zwingend vorgegeben ist. Wenn Sie den Austausch dieser Teile von Hewlett Packard Enterprise vornehmen lassen, werden Ihnen die Anfahrt- und Arbeitskosten für diesen Service berechnet.
- **Optional—**Teile, für die das Customer Self Repair-Verfahren optional ist. Diese Teile sind auch für Customer Self Repair ausgelegt. Wenn Sie jedoch den Austausch dieser Teile von Hewlett Packard

Enterprise vornehmen lassen möchten, können bei diesem Service je nach den für Ihr Produkt vorgesehenen Garantiebedingungen zusätzliche Kosten anfallen.

HINWEIS: Einige Hewlett Packard Enterprise Teile sind nicht für Customer Self Repair ausgelegt. Um den Garantieanspruch des Kunden zu erfüllen, muss das Teil von einem Hewlett Packard Enterprise Servicepartner ersetzt werden. Im illustrierten Teilekatalog sind diese Teile mit „No“ bzw. „Nein“ gekennzeichnet.

CSR-Teile werden abhängig von der Verfügbarkeit und vom Lieferziel am folgenden Geschäftstag geliefert. Für bestimmte Standorte ist eine Lieferung am selben Tag oder innerhalb von vier Stunden gegen einen Aufpreis verfügbar. Wenn Sie Hilfe benötigen, können Sie das Hewlett Packard Enterprise Support Center anrufen und sich von einem Mitarbeiter per Telefon helfen lassen. Den Materialien von Hewlett Packard Enterprise, die mit einem CSR-Ersatzteil geliefert werden, können Sie entnehmen, ob das defekte Teil an Hewlett Packard Enterprise zurückgeschickt werden muss. Wenn es erforderlich ist, das defekte Teil an Hewlett Packard Enterprise zurückzuschicken, müssen Sie dies innerhalb eines vorgegebenen Zeitraums tun, in der Regel innerhalb von fünf (5) Geschäftstagen. Das defekte Teil muss mit der zugehörigen Dokumentation in der Verpackung zurückgeschickt werden, die im Lieferumfang enthalten ist. Wenn Sie das defekte Teil nicht zurückschicken, kann Hewlett Packard Enterprise Ihnen das Ersatzteil in Rechnung stellen. Im Falle von Customer Self Repair kommt Hewlett Packard Enterprise für alle Kosten für die Lieferung und Rücksendung auf und bestimmt den Kurier-/Frachtdienst.

Weitere Informationen über das Hewlett Packard Enterprise Customer Self Repair Programm erhalten Sie von Ihrem Servicepartner vor Ort. Informationen über das CSR-Programm in Nordamerika finden Sie auf der Hewlett Packard Enterprise Website unter (**http://www.hpe.com/support/selfrepair**).

Reparaciones del propio cliente

Los productos de Hewlett Packard Enterprise incluyen muchos componentes que el propio usuario puede reemplazar (Customer Self Repair, CSR) para minimizar el tiempo de reparación y ofrecer una mayor flexibilidad a la hora de realizar sustituciones de componentes defectuosos. Si, durante la fase de diagnóstico, Hewlett Packard Enterprise (o los proveedores o socios de servicio de Hewlett Packard Enterprise) identifica que una reparación puede llevarse a cabo mediante el uso de un componente CSR, Hewlett Packard Enterprise le enviará dicho componente directamente para que realice su sustitución. Los componentes CSR se clasifican en dos categorías:

- **Obligatorio—**componentes cuya reparación por parte del usuario es obligatoria. Si solicita a Hewlett Packard Enterprise que realice la sustitución de estos componentes, tendrá que hacerse cargo de los gastos de desplazamiento y de mano de obra de dicho servicio.
- **Opcional—**componentes cuya reparación por parte del usuario es opcional. Estos componentes también están diseñados para que puedan ser reparados por el usuario. Sin embargo, si precisa que Hewlett Packard Enterprise realice su sustitución, puede o no conllevar costes adicionales, dependiendo del tipo de servicio de garantía correspondiente al producto.

NOTA: Algunos componentes de Hewlett Packard Enterprise no están diseñados para que puedan ser reparados por el usuario. Para que el usuario haga valer su garantía, Hewlett Packard Enterprise pone como condición que un proveedor de servicios autorizado realice la sustitución de estos componentes. Dichos componentes se identifican con la palabra "No" en el catálogo ilustrado de componentes.

Según la disponibilidad y la situación geográfica, los componentes CSR se enviarán para que lleguen a su destino al siguiente día laborable. Si la situación geográfica lo permite, se puede solicitar la entrega en el mismo día o en cuatro horas con un coste adicional. Si precisa asistencia técnica, puede llamar al Centro de asistencia técnica de Hewlett Packard Enterprise y recibirá ayuda telefónica por parte de un técnico. Con el envío de materiales para la sustitución de componentes CSR, Hewlett Packard Enterprise especificará si los componentes defectuosos deberán devolverse a Hewlett Packard Enterprise. En aquellos casos en los que sea necesario devolver algún componente a Hewlett Packard Enterprise, deberá hacerlo en el periodo de tiempo especificado, normalmente cinco días laborables. Los componentes defectuosos deberán devolverse con toda la documentación relacionada y con el embalaje de envío. Si no enviara el componente defectuoso requerido, Hewlett Packard Enterprise podrá cobrarle por el de sustitución. En el caso de todas sustituciones que lleve a cabo el cliente, Hewlett Packard

Enterprise se hará cargo de todos los gastos de envío y devolución de componentes y escogerá la empresa de transporte que se utilice para dicho servicio.

Para obtener más información acerca del programa de Reparaciones del propio cliente de Hewlett Packard Enterprise, póngase en contacto con su proveedor de servicios local. Si está interesado en el programa para Norteamérica, visite la página web de Hewlett Packard Enterprise CSR (**http://www.hpe.com/support/selfrepair**).

Customer Self Repair

Veel onderdelen in Hewlett Packard Enterprise producten zijn door de klant zelf te repareren, waardoor de reparatieduur tot een minimum beperkt kan blijven en de flexibiliteit in het vervangen van defecte onderdelen groter is. Deze onderdelen worden CSR-onderdelen (Customer Self Repair) genoemd. Als Hewlett Packard Enterprise (of een Hewlett Packard Enterprise Service Partner) bij de diagnose vaststelt dat de reparatie kan worden uitgevoerd met een CSR-onderdeel, verzendt Hewlett Packard Enterprise dat onderdeel rechtstreeks naar u, zodat u het defecte onderdeel daarmee kunt vervangen. Er zijn twee categorieën CSR-onderdelen:

- **Verplicht—**Onderdelen waarvoor reparatie door de klant verplicht is. Als u Hewlett Packard Enterprise verzoekt deze onderdelen voor u te vervangen, worden u voor deze service reiskosten en arbeidsloon in rekening gebracht.
- **Optioneel—**Onderdelen waarvoor reparatie door de klant optioneel is. Ook deze onderdelen zijn ontworpen voor reparatie door de klant. Als u echter Hewlett Packard Enterprise verzoekt deze onderdelen voor u te vervangen, kunnen daarvoor extra kosten in rekening worden gebracht, afhankelijk van het type garantieservice voor het product.

OPMERKING: Sommige Hewlett Packard Enterprise onderdelen zijn niet ontwikkeld voor reparatie door de klant. In verband met de garantievoorwaarden moet het onderdeel door een geautoriseerde Service Partner worden vervangen. Deze onderdelen worden in de geïllustreerde onderdelencatalogus aangemerkt met "Nee".

Afhankelijk van de leverbaarheid en de locatie worden CSR-onderdelen verzonden voor levering op de eerstvolgende werkdag. Levering op dezelfde dag of binnen vier uur kan tegen meerkosten worden aangeboden, indien dit mogelijk is gezien de locatie. Indien assistentie is gewenst, belt u het Hewlett Packard Enterprise Support Center om via de telefoon ondersteuning van een technicus te ontvangen. Hewlett Packard Enterprise vermeldt in de documentatie bij het vervangende CSR-onderdeel of het defecte onderdeel aan Hewlett Packard Enterprise moet worden geretourneerd. Als het defecte onderdeel aan Hewlett Packard Enterprise moet worden teruggezonden, moet u het defecte onderdeel binnen een bepaalde periode, gewoonlijk vijf (5) werkdagen, retourneren aan Hewlett Packard Enterprise. Het defecte onderdeel moet met de bijbehorende documentatie worden geretourneerd in het meegeleverde verpakkingsmateriaal. Als u het defecte onderdeel niet terugzendt, kan Hewlett Packard Enterprise u voor het vervangende onderdeel kosten in rekening brengen. Bij reparatie door de klant betaalt Hewlett Packard Enterprise alle verzendkosten voor het vervangende en geretourneerde onderdeel en kiest Hewlett Packard Enterprise zelf welke koerier/transportonderneming hiervoor wordt gebruikt.

Neem contact op met een Service Partner voor meer informatie over het Customer Self Repair programma van Hewlett Packard Enterprise. Informatie over Service Partners vindt u op de Hewlett Packard Enterprise website (**http://www.hpe.com/support/selfrepair**).

Reparo feito pelo cliente

Os produtos da Hewlett Packard Enterprise são projetados com muitas peças para reparo feito pelo cliente (CSR) de modo a minimizar o tempo de reparo e permitir maior flexibilidade na substituição de peças com defeito. Se, durante o período de diagnóstico, a Hewlett Packard Enterprise (ou fornecedores/parceiros da Hewlett Packard Enterprise) concluir que o reparo pode ser efetuado pelo uso de uma peça CSR, a Hewlett Packard Enterprise enviará a peça diretamente ao cliente. Há duas categorias de peças CSR:

- **Obrigatória**—Peças cujo reparo feito pelo cliente é obrigatório. Se desejar que a Hewlett Packard Enterprise substitua essas peças, serão cobradas as despesas de transporte e mão-de-obra do serviço.
- **Opcional**—Peças cujo reparo feito pelo cliente é opcional. Essas peças também são projetadas para o reparo feito pelo cliente. No entanto, se desejar que a Hewlett Packard Enterprise as substitua, pode haver ou não a cobrança de taxa adicional, dependendo do tipo de serviço de garantia destinado ao produto.

OBSERVAÇÃO: Algumas peças da Hewlett Packard Enterprise não são projetadas para o reparo feito pelo cliente. A fim de cumprir a garantia do cliente, a Hewlett Packard Enterprise exige que um técnico autorizado substitua a peça. Essas peças estão identificadas com a marca "No" (Não), no catálogo de peças ilustrado.

Conforme a disponibilidade e o local geográfico, as peças CSR serão enviadas no primeiro dia útil após o pedido. Onde as condições geográficas permitirem, a entrega no mesmo dia ou em quatro horas pode ser feita mediante uma taxa adicional. Se precisar de auxílio, entre em contato com o Centro de suporte técnico da Hewlett Packard Enterprise para que um técnico o ajude por telefone. A Hewlett Packard Enterprise especifica nos materiais fornecidos com a peça CSR de reposição se a peça com defeito deve ser devolvida à Hewlett Packard Enterprise. Nos casos em que isso for necessário, é preciso enviar a peça com defeito à Hewlett Packard Enterprise, você deverá enviar a peça com defeito de volta para a Hewlett Packard Enterprise dentro do período de tempo definido, normalmente em 5 (cinco) dias úteis. A peça com defeito deve ser enviada com a documentação correspondente no material de transporte fornecido. Caso não o faça, a Hewlett Packard Enterprise poderá cobrar a reposição. Para as peças de reparo feito pelo cliente, a Hewlett Packard Enterprise paga todas as despesas de transporte e de devolução da peça e determina a transportadora/serviço postal a ser utilizado.

Para obter mais informações sobre o programa de reparo feito pelo cliente da Hewlett Packard Enterprise, entre em contato com o fornecedor de serviços local. Para o programa norte-americano, visite o site da Hewlett Packard Enterprise (**http://www.hpe.com/support/selfrepair**).

カスタマーセルフリペア

修理時間を短縮し、故障部品の交換における高い柔軟性を確保するために、Hewlett Packard Enterprise製品には多数のカスタマーセルフリペア（CSR）部品があります。診断の際に、CSR部品を使用すれば修理ができるとHewlett Packard Enterprise（Hewlett Packard EnterpriseまたはHewlett Packard Enterprise正規保守代理店）が判断した場合、Hewlett Packard Enterpriseはその部品を直接、お客様に発送し、お客様に交換していただきます。CSR部品には以下の2種類があります。

- **必須** - カスタマーセルフリペアが必須の部品。当該部品について、もしもお客様がHewlett Packard Enterpriseに交換作業を依頼される場合には、その修理サービスに関する交通費および人件費がお客様に請求されます。
- **任意** - カスタマーセルフリペアが任意である部品。この部品もカスタマーセルフリペア用です。当該部品について、もしもお客様がHewlett Packard Enterpriseに交換作業を依頼される場合には、お買い上げの製品に適用される保証サービス内容の範囲内においては、別途費用を負担していただくことなく保証サービスを受けることができます。

注：Hewlett Packard Enterprise製品の一部の部品は、カスタマーセルフリペアの対象外です。製品の保証を継続するためには、Hewlett Packard EnterpriseまたはHewlett Packard Enterprise正規保守代理店による交換作業が必須となります。部品カタログには、当該部品がカスタマーセルフリペア除外品である旨が記載されています。

部品供給が可能な場合、地域によっては、CSR部品を翌営業日に届くように発送します。また、地域によっては、追加費用を負担いただくことにより同日または4時間以内に届くように発送することも可能な場合があります。サポートが必要なときは、Hewlett Packard Enterpriseの修理受付窓口に電話していただければ、技術者が電話でアドバイスします。交換用のCSR部品または同梱物には、故障部品をHewlett Packard Enterpriseに返送する必要があるかどうかが表示されています。故障部品をHewlett Packard Enterpriseに返送する必要がある場合は、指定期限内（通常は5営業日以内）に故障部品をHewlett Packard Enterpriseに返送してください。故障部品を返送する場合は、届いた時の梱包箱に関連書類とともに入れてください。故障部品を返送しない場合、Hewlett Packard Enterpriseから部品費用が請求されます。カスタマーセルフリペアの際には、Hewlett Packard Enterpriseは送料および部品返送費を全額負担し、使用する宅配便会社や運送会社を指定します。

客户自行维修

Hewlett Packard Enterprise 产品提供许多客户自行维修 (CSR) 部件，以尽可能缩短维修时间和在更换缺陷部件方面提供更大的灵活性。如果在诊断期间 Hewlett Packard Enterprise（或Hewlett Packard Enterprise 服务提供商或服务合作伙伴）确定可以通过使用 CSR 部件完成维修，Hewlett Packard Enterprise 将直接把该部件发送给您进行更换。有两类 CSR 部件：

- **强制性的** — 要求客户必须自行维修的部件。如果您请求 Hewlett Packard Enterprise 更换这些部件，则必须为该服务支付差旅费和人工费用。
- **可选的** — 客户可以选择是否自行维修的部件。这些部件也是为客户自行维修设计的。不过，如果您要求 Hewlett Packard Enterprise 为您更换这些部件，则根据为您的产品指定的保修服务类型，Hewlett Packard Enterprise 可能收取或不再收取任何附加费用。

注：某些 Hewlett Packard Enterprise 部件的设计并未考虑客户自行维修。为了满足客户保修的需要，Hewlett Packard Enterprise 要求授权服务提供商更换相关部件。这些部件在部件图解目录中标记为“否”。

CSR 部件将在下一个工作日发运（取决于备货情况和允许的地理范围）。在允许的地理范围内，可在当天或四小时内发运，但要收取额外费用。如果需要帮助，您可以致电 Hewlett Packard Enterprise 技术支持中心，将会有技术人员通过电话为您提供帮助。Hewlett Packard Enterprise 会在随更换的 CSR 部件发运的材料中指明是否必须将有缺陷的部件返还给 Hewlett Packard Enterprise。如果要求您将有缺陷的部件返还给 Hewlett Packard Enterprise，那么您必须在规定的期限内（通常是五 (5) 个工作日）将缺陷部件发给 Hewlett Packard Enterprise。有缺陷的部件必须随所提供的发运材料中的相关文件一起返还。如果未能送还有缺陷的部件，Hewlett Packard Enterprise 可能会要求您支付更换费用。客户自行维修时，Hewlett Packard Enterprise 将承担所有相关运输和部件返回费用，并指定快递商/承运商。

有关 Hewlett Packard Enterprise 客户自行维修计划的详细信息，请与您当地的服务提供商联系。有关北美地区的计划，请访问 Hewlett Packard Enterprise 网站 (http://www.hpe.com/support/selfrepair)。

客戶自行維修

Hewlett Packard Enterprise 產品設計了許多「客戶自行維修」(CSR) 的零件以減少維修時間，並且使得更換瑕疵零件時能有更大的彈性。如果在診斷期間，Hewlett Packard Enterprise (或 Hewlett Packard Enterprise 服務供應商或維修夥伴) 辨認出此項維修工作可以藉由使用 CSR 零件來完成，則 Hewlett Packard Enterprise 將直接寄送該零件給您作更換。CSR 零件分為兩種類別：

- **強制的** — 客戶自行維修所使用的零件是強制性的。如果您要求 Hewlett Packard Enterprise 更換這些零件，Hewlett Packard Enterprise 將會向您收取此服務所需的外出費用與勞動成本。
- **選購的** — 客戶自行維修所使用的零件是選購的。這些零件也設計用於客戶自行維修之用。不過，如果您要求 Hewlett Packard Enterprise 為您更換，則可能需要也可能不需要負擔額外的費用，端視針對此產品指定的保固服務類型而定。

備註：某些 Hewlett Packard Enterprise 零件沒有消費者可自行維修的設計。為符合客戶保固，Hewlett Packard Enterprise 需要授權的服務供應商更換零件。這些零件在圖示的零件目錄中，被標示為「否」。

基於材料取得及環境允許的情況下，CSR 零件將於下一個工作日以快遞寄送。在環境的允許下當天或四小時內送達，則可能需要額外的費用。若您需要協助，可致電 Hewlett Packard Enterprise 支援中心，會有一位技術人員透過電話來協助您。不論損壞的零件是否必須退回，Hewlett Packard Enterprise 皆會在與 CSR 替換零件一起運送的材料中註明。若要將損壞的零件退回 Hewlett Packard Enterprise，您必須在指定的一段時間內 (通常為五 (5) 個工作天)，將損壞的零件寄回 Hewlett Packard Enterprise。損壞的零件必須與寄送資料中隨附的相關技術文件一併退還。如果無法退還損壞的零件，Hewlett Packard Enterprise 可能要向您收取替換費用。針對客戶自行維修情形，Hewlett Packard Enterprise 將負責所有運費及零件退還費用，並指定使用何家快遞/貨運公司。

如需 Hewlett Packard Enterprise 的 CSR 方案詳細資訊，請連絡您當地的服務供應商。至於北美方案，請參閱 Hewlett Packard Enterprise 的 CSR 網站frepair (http://www.hpe.com/support/selfrepair)。

고객 셀프 수리

Hewlett Packard Enterprise 제품은 수리 시간을 최소화하고 결함이 있는 부품 교체 시 더욱 융통성을 발휘할 수 있도록 하기 위해 고객 셀프 수리(CSR) 부품을 다량 사용하여 설계되었습니다. 진단 기간 동안 Hewlett Packard Enterprise(또는 Hewlett Packard Enterprise 서비스 공급업체 또는 서비스 협력업체)에서 CSR 부품을 사용하여 수리가 가능하다고 판단되면 Hewlett Packard Enterprise는 해당 부품을 바로 사용자에게 보내어 사용자가 교체할 수 있도록 합니다. CSR 부품에는 두 가지 종류가 있습니다.

- **필수** - 고객 셀프 수리가 의무 사항인 필수 부품. 사용자가 Hewlett Packard Enterprise에 이 부품의 교체를 요청할 경우 이 서비스에 대한 출장비 및 작업비가 청구됩니다.
- **선택 사항** - 고객 셀프 수리가 선택 사항인 부품. 이 부품들도 고객 셀프 수리가 가능하도록 설계되었습니다. 하지만 사용자가 Hewlett Packard Enterprise에 이 부품의 교체를 요청할 경우 사용자가 구입한 제품에 해당하는 보증 서비스 유형에 따라 추가 비용 없이 교체가 가능할 수 있습니다.

참고: 일부 Hewlett Packard Enterprise 부품은 고객 셀프 수리가 불가능하도록 설계되었습니다. Hewlett Packard Enterprise는 만족스러운 고객 보증을 위해 공인 서비스 제공업체를 통해 부품을 교체하도록 하고 있습니다. 이러한 부품들은 Illustrated Parts Catalog에 "No"라고 표시되어 있습니다.

CSR 부품은 재고 상태와 지리적 조건이 허용하는 경우 다음 영업일 납품이 가능하도록 배송이 이루어집니다. 지리적 조건이 허용하는 경우 추가 비용이 청구되는 조건으로 당일 또는 4시간 배송이 가능할 수도 있습니다. 도움이 필요하시면 Hewlett Packard Enterprise Support Center로 전화하십시오. 전문 기술자가 전화로 도움을 줄 것입니다. Hewlett Packard Enterprise는 결함이 발생한 부품을 Hewlett Packard Enterprise로 반환해야 하는지 여부를 CSR 교체 부품과 함께 배송된 자료에 지정합니다. 결함이 발생한 부품을 Hewlett Packard Enterprise로 반환해야 하는 경우에는 지정된 기간 내(통상 영업일 기준 5일)에 Hewlett Packard Enterprise로 반환해야 합니다. 이때 결함이 발생한 부품은 제공된 포장 재료에 넣어 관련 설명서와 함께 반환해야 합니다. 결함이 발생한 부품을 반환하지 않는 경우 Hewlett Packard Enterprise가 교체 부품에 대해 비용을 청구할 수 있습니다. 고객 셀프 수리의 경우, Hewlett Packard Enterprise는 모든 운송 및 부품 반환 비용을 부담하며 이용할 운송업체 및 택배 서비스를 결정합니다.

Hewlett Packard Enterprise CSR 프로그램에 대한 자세한 내용은 가까운 서비스 제공업체에 문의하십시오. 북미 지역의 프로그램에 대해서는 Hewlett Packard Enterprise CSR 웹 사이트(http://www.hpe.com/support/selfrepair)를 참조하십시오.

Remote support

Remote support is available with supported devices as part of your warranty or contractual support agreement. It provides intelligent event diagnosis, and automatic, secure submission of hardware event notifications to Hewlett Packard Enterprise, which will initiate a fast and accurate resolution based on your product's service level. Hewlett Packard Enterprise strongly recommends that you register your device for remote support.

For more information and device support details, go to the Insight Remote Support website (**http://www.hpe.com/info/insightremotesupport/docs**).

Acronyms and abbreviations

ABEND

abnormal end

ACU

Array Configuration Utility

AMP

Advanced Memory Protection

ASR

Automatic Server Recovery

BSMI

Bureau of Standards, Metrology and Inspection

CE

Conformité Européenne (European Conformity)

CSA

Canadian Standards Association

CSR

Customer Self Repair

EMI

electromagnetic interference

FBWC

flash-backed write cache

FCC

Federal Communications Commission

HP SUM

HP Smart Update Manager

HPE SIM

HPE Systems Insight Manager

IEC

International Electrotechnical Commission

iLO

Integrated Lights-Out

IML

Integrated Management Log

ISO

International Organization for Standardization

LFF

large form factor

LRDIMM

load reduced dual in-line memory module

NMI

nonmaskable interrupt

NVRAM

nonvolatile memory

PCIe

Peripheral Component Interconnect Express

PDU

power distribution unit

POST

Power-On Self-Test

RBSU

ROM-Based Setup Utility

RDIMM

registered dual in-line memory module

RDP

Rapid Deployment Pack

RF

radio frequency

RPS

redundant power supply

SAS

serial attached SCSI

SATA

serial ATA

SD

Secure Digital

SFF

small form factor

SPP

Service Pack for ProLiant

TMRA

recommended ambient operating temperature

TPM

Trusted Platform Module

UDIMM

unregistered dual in-line memory module

UEFI

Unified Extensible Firmware Interface

UID

unit identification

USB

universal serial bus

VCA

Version Control Agent

VCRM

Version Control Repository Manager

xHCI

Extensible Host Controller Interface

Documentation feedback

Hewlett Packard Enterprise is committed to providing documentation that meets your needs. To help us improve the documentation, send any errors, suggestions, or comments to Documentation Feedback (**mailto:docsfeedback@hpe.com**). When submitting your feedback, include the document title, part number, edition, and publication date located on the front cover of the document. For online help content, include the product name, product version, help edition, and publication date located on the legal notices page.

Index

A

Array Configuration Utility (ACU) 94
ASR (Automatic Server Recovery) 94
authorized reseller 108
Automatic Server Recovery (ASR) 94

B

battery 101
battery, installing 101
BIOS upgrade 86
boot options 24, 90, 91, 93
BSMI notice 103
buttons 6
buttons, front panel 6

C

cables 73
cabling 73, 82
Canadian notice 103
Care Pack 98
cautions 16
Change Control 90, 91, 99
components 6
components, front panel 6, 7
components, identification 6
components, system board 11
configuration of system 86
connectors 6
contacting HPE 108
CSR (customer self repair) 108
customer self repair (CSR) 108

D

diagnostic tools 86, 89, 91, 93, 94
diagnostics utility 89
DIMM identification 66
DIMMs 66
DIMMs, single- and dual-rank 66
drivers 97
drives, installation guidelines 39

E

electrical grounding requirements 23
environmental requirements 22, 23
Erase Utility 86, 89
error messages 100
European Union notice 103
expansion board options 46

F

FBWC cabling 73
features 6, 94
Federal Communications Commission (FCC) notice 103
firmware 95, 98
front panel components 6, 7
front panel LEDs 7

G

grounding requirements 23

H

hardware options installation 26
health driver 94
Hewlett Packard Enterprise Technical Support 98, 108, 116
Hot-plug SAS/SATA hard drive cabling 73
HPE Insight Remote Support software 87, 88, 98

I

iLO (Integrated Lights-Out) 86, 87
IML (Integrated Management Log) 86, 87
Insight Diagnostics 87, 88, 89, 95
Insight Remote Support Software 88, 98
installation services 22, 24
installation, server options 24, 26
installing hardware 24, 26
Integrated Lights-Out (iLO) 87
Integrated Management Log (IML) 87
Intelligent Provisioning 86, 88, 89, 90, 91

J

Japanese notice 103

L

LEDs, troubleshooting 100

M

M.2 SSD cabling 78
M.2 SSD enablement option 56
memory 66, 67
memory subsystem architecture 66
modes 86

N

NMI functionality 12
notification actions 99

O

operating systems 98
optimum environment 22
options installation 24, 26

P

power distribution unit (PDU) 23
power requirements 23
power supply cabling 82
power supply specifications 105
powering down 16
powering up 16
preparation procedures 16
problem diagnosis 100
Product ID 93

Q

QuickSpecs 46, 66, 86

R

recovering a lost password 71
redundant ROM 95
re-entering the server serial number 93
registering the server 25
regulatory compliance notices 103, 104
replacing the batteries 101
retaining the recovery key/password 71
ROM redundancy 95
ROMPaq utility 95

S

safety considerations 103
scripted installation 90
scripting toolkit 86, 90
security 95
serial number 93
series number 103
server features and options 26
Server mode 86
server setup 22, 25, 95
server specifications 105
server warnings and cautions 16
Service Packs 90
shipping carton contents 23
Smart Storage Battery 80
Smart Update Manager 86, 90
Smart Update Manager overview 86, 90
software 86, 98
space and airflow requirements 22
specifications 105
specifications, environmental 22, 105
specifications, power 105
specifications, server 105
storage controller 46
support 108
supported operating systems 98
system battery 101
system board components 11
system components 6
system configuration settings 95
system maintenance switch 11

T

Taiwan battery recycling notice 103
tape drive cabling 74
tape drives 54
technical support 98, 108
telephone numbers 108
temperature requirements 22
TPM (Trusted Platform Module) 71
troubleshooting 100

U

updating the system ROM 95, 96, 97
USB support 94
utilities 86, 90, 91, 94
utilities, deployment 86, 90

V

ventilation 22
Version Control 98
Virtualization option 98

W

warnings 16
website, Hewlett Packard Enterprise 108